ACEDEMIC YEAR

2018-2019

KNOWLEDGE INSTITUTE OF TECHNOLOGY, SALEM – 637 504
Approved by AICTE, Affiliated to Anna University, Chennai.

Report of Program / Event Conducted

Name of the Program / Event		Solid Modeling (Level-2) using CATIA & NXCAD software	
Resource Person details		Mr..S.SANTHOSH & Mr.KV.RANGASAMY Assistant Professor, Dept. of Mechanical Engg. KIOT	
Organizing Dept. / Cell	Mechanical	Details of Participant	IV Students = 102
Date, Time and Venue	16.07.2018-28.07.2018 COE – CRCPDT, A-Block, KIOT.		

Description of the program

1. He discussed about 3 features of CATIA & NXCAD software. It contains CATIA & NXCAD Advanced level.
2. He explained about drafting and detailing, generative sheet metal design and generative shape design.
3. Also he explained about Geometric Dimensioning and Tolerancing (GD&T).
4. He shared his personal experiences and difficulties he faced in his Industrial Career.

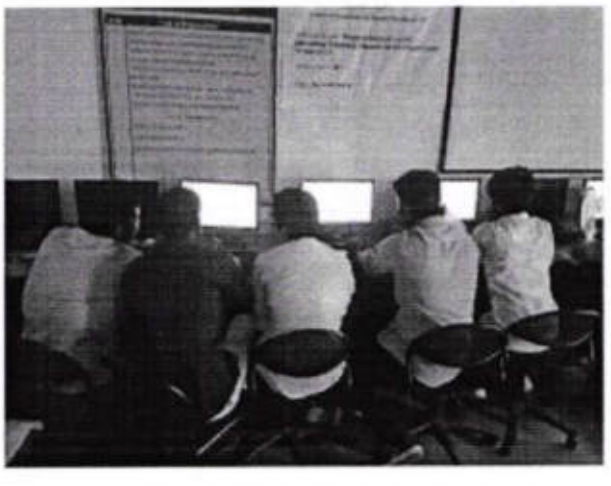

Principal,
Knowledge Institute of Technology
Kakapalayam (Po), Salem-637 50

From

J.Prakash,
Assistant Professor
Department of Mechanical Engineering,
Knowledge Institute of Technology,
Salem.

To

The Principal,
Knowledge Institute of Technology,
Salem .

Through: Head of the Department, Department of Mechanical Engineering

Respected Sir,

Sub: Certification Course conduction–regarding

Composite research Centre for Product Design, Digital Manufacturing and Technical Documentation (CRCPDT) and Designers club is jointly organizing Solid Modeling (Level-2) using CATIA software. In this regard, I request your permission to execute the Certificate course for Mechanical Engineering students.

Thanking You

Salem

04.07.2018

Yours Faithfully

J.Prakash

Forwarded to the Principal.

PRINCIPAL,
Knowledge Institute of Technology
Kakapalayam (PO) Salem - 637 504

KNOWLEDGE INSTITUTE OF TECHNOLOGY, SALEM - 637 504			
CIRCULAR			
Circular No.		**Date**	04.07.2018
To	IV-Year students		
Subject	Solid Modeling (Level-2) using CATIA & NXCAD software		
Circular issued by	Center of Excellence – CRCPDT & Designers Club, Department of Mechanical Engineering.		

This is to inform you that Center of Excellence – Composite Research Centre for Product Design, Digital Manufacturing and Technical Documentation (CRCPDT) & Designers Club has planned to conduct Solid Modeling (Level-2) using CATIA & NXCAD software for IV and III year students. Registered students are requested to attend the program as per the given schedule.

SL. NO.	NAME OF THE PROGRAM	VENUE DATE & TIME	RESOURCE PERSON
1	Solid Modeling (Level-2) using CATIA & NXCAD software	COE – CRCPDT, A-Block, KIOT. Advanced: 16.7.2018 to 28.07.2018	Mr.S.Santhosh Mr.K.V.Rangasamy AP, Mecahanical Engg. KIOT

For Further Details Kindly Contact: Mr.J.Prakash, AP/Mech, Faculty Incharge, COE-CRCPDT. M:+91 9789565007

J.Prakash		
SENDER		PRINCIPAL

MECH	VP Office	CIVIL	EEE	ECE	CSE	S&H	PD	LIB	EMS	AO	Trans-port I/C	Hostel NB	Director / Training	Director / Placement	Residential Warden		College NB	Office / File	Class Circula-tion	Security Office	KBS	Recep tion
															LH	GH						
*	*	*	*	*	*								*	*				*				

Checked by Principal office I/C		Verified by the sender	

File :

1) Principal Office :
2) Concerned issuing department :

PRINCIPAL
Knowledge Institute of Technology
Kakapalayam (PO) Salem - 637 504

Certificate Course
on
Solid Modeling (Level-2)
using NXCAD software

16.07.2018 to 28.07.2018

Organized by

Department of Mechanical Engineering

KNOWLEDGE
INSTITUTE OF TECHNOLOGY

(Accredited by NAAC)

KIOT campus, Kakapalayam (PO), Salem-637 504,
Tamil Nadu, India.
www.kiot.ac.in

in association with

DASSAULT SYSTEMES

Harita TECHSERV

PRINCIPAL
Knowledge Institute of Technology
Kakapalayam (PO) Salem - 637 504

About KIOT

KIOT is one of the best engineering institutes in Salem. It is approved by AICTE, New Delhi, affiliated to Anna University, Chennai and offers 5 UG Programs (Mech., Civil, EEE, ECE and CSE), 4 PG Programs (ISE, CSE, EST and VLSI Design) and 2 Ph.D. programs (Mech. and IC Engg.). KIOT is accredited by NAAC In the single window counselling (TNEA 2018) seats of KIOT were filled in 62nd position among more than 500 self-financing engineering colleges. KIOT is known for its placement of students in well reputed organisations. KIOT has been rated one among the top 3 institutions across India in AICTE-CII Survey of Industry Linked Technical institutions-2016 under the category of emerging engineering colleges. KIOT was recognised nationally by ISTE in awarding Best Engineering College Principal Award to Dr.PSS.Srinivasan, Principal, KIOT. The college has 17 industry linked labs, Research Centres and COEs. KIOT faculty have published 200+ papers in conference and 250+ Research Papers in reputed journals in the last 3 years. We also offer MBA programme at Knowledge Business School, Salem (KBSS), a sister institution of KIOT.

About the Department

Vision: To create competent and industry relevant Mechanical Engineers with professional and social values to meet global challenges.

Mission:

- Enabling environment for effective teaching - learning and research to meet global challenges.
- Motivating students to pursue higher education and to excel in competitive examinations and entrepreneurship.
- Establish a continuous Industry Institute Interaction to make the students employable.
- Inculcate the students leadership quality with ethical values and spirit of team work.

Mechanical Engineering program, accredited by NBA, is one of the vibrant departments of KIOT and offers B.E Mechanical Engineering, M.E Industrial Safety Engineering & Ph.D. programmes. The Department was awarded with platinum ranking in AICTE-CII Survey of Industry Linked Technical Institutions-2016. Dr.K.Visagavel, The Department has a team of dedicated faculty members with 5 Ph.D. The Department has established industrial collaborative research centres with Harita Techserv Pvt. Ltd. and IAPMO (International Association of Plumbing and Mechanical Officials).

SYLLABUS

1.Introduction to NXCAD

Introduction About NXCAD, History of NXCAD, NXCAD modeling process, Parametric design concept, feature based design. About PLM, NXCAD Features, SKETCHER, Creating the new part.

2.SKETCHER WORKBENCH

Basic sketch, Sketch in task environment, Selection tools, Profile, Predefined shapes, Circles, Spline, Conics, Line, Points,

Operations, Corner, Chamfer, Projections, Transformations.

Constrains, Constrain dialogue box, Constrains, Fix together, Animate constrain, Edit multi constrain, Sketch tools, Grid, Snap on grid, Construction. Geometrical constrains, Dimensional constrains., Sketch analysis Visualization tools, View tool bar, Workbench.

3.PART MODELING

Sketch based features Pad, Multipad, Drafted filleted pad. Pocket, Multipocket, Drafted filleted pocket Shafts, groove Holes Rib, Slots Solid combine, Stiffner.

Multi section solid, Multi section solid removal Edit Geometry, Parent child relationship, copy & paste features, Dress up features -Edge fillet, Variable radius fillet, Face to face fillet, Tri tangent fillet Chamfer Drafts.

Drafted reflected line, Variable angle draft Shell feature, Thicken Thread, Remove face, Replace face Transformation Features-Translation, Rotation, Symmetry, Axis to axis Mirror, Pattern-Rectangular.

Circular, User defined Design table, Power copy, Functions and relations, Catalog Scaling-Scale, Affinity Reference elements- Point, Axis, Planes, Boolean operations- Assemble, Add, Remove, Intersect, Union trim.

4. ASSEMBLY DESIGN

Introduction on assembly Assembly approaches-Top down assembly, Bottom up assembly Product structure tools Component, Product, Part Existing component, Existing component with positioning Replace component.

Graph tree reordering, Generate numbering Fast multi installation, Define multi installation Move options Manipulations Snap, Smart move Explode Stop manipulation on clash Assembly constrains Coincident, Contact constrain, Offset.

Angular, parallel, Perpendicular, Fix together, Quick constrain, Change constrain, Reuse pattern Assembly Features Split, Hole, Pocket, Add, Remove Symmetry in assembly.

5. DRAFTING AND DETAILING

Introduction on drafting Standards, Templates in drafting Creating the drawing Views Front view, Unfolded view, Projections, Auxiliary view, Isometric view, Advanced front view Sections Detail view, Clipping view, Broken view, View creation wizard Dimensions Dimensions, Chained dimensions, Cumulated dimensions

Stacked dimensions, Distance, Angular, Radius, Diameter, Chamfer dimensions, Thread dimensions, Coordinate dimensions, Hole dimension table and coordinate dimension table Dimension edition, Datum feature, Geometric tolerance Annotations Text, Text with leader, Balloon, Datum target, Text template replacement Symbols and Table creation Dress up Centre line. Area fill creations, Arrow Geometry creation Points, Lines, Circle and Ellipse, Profiles, Curves tools, Transformation tools, Constrains Generation Generate dimensions, Generate balloons. Bill of material generation Saving and Formats.

6. GENERATIVE SHEET METAL DESIGN

Introduction about sheet metal design Sheet metal parameters Walls-Wall, wall on edge, Extrusion Flange, Hem, Tear drop, User flange Recognize tool Rolled wall Hopper.

Free form surface, Rolled wall Bending Bend, Conical bend Bend from flat, Folding, Unfolding Point or curve mapping Cutting and stamping Pocket.

Hole, Circular cutout, corner relief, Fillet, Chamfer.

7. GENERATIVE SHAPE DESIGN

Wireframe Points, Points and plane repetition, Extemum and Extemum polar Line, Axis, Polyline Planes Projection.

Combine, Reflect line, Silhouette Parallel curve, Rolling offset, 3D offset Circle, and Corner. Connect curve, Conic Spline, Helix, Spiral, Curve from plane, Contour, Revolve, Sphere, Cylinder

Isoparametric curve Surfaces Extrude, Offset surfaces Sweeps and adaptive sweep Fill surfaces, Multisection surface. Blend surface Operations Join Split and Trim Extracts Shape fillets Chamfer Translate Extrapolate BIW templates Advance surfacing.

For Registration Kindly Contact:
Mr.J.Prakash, AP/Mech,
Faculty Incharge,COE-CRCPDT.
M:+91 9789565007, Mail:jpmech@kiot.ac.in

PRINCIPAL
Knowledge Institute of Technology
Kakapalayam (PO) Salem - 637 504

KNOWLEDGE INSTITUTE OF TECHNOLOGY Department of Mechanical Engineering Course Plan			
Name of the COE	Composite Research Centre for Product Design, Digital Manufacturing and Technical Documentation (CRCPDT)		
Name of the Course	NX CAD		
Solid Modeling (Level-1) using NXCAD software	04	Total number of Hours	32 hours
Solid Modeling (Level-2) using NXCAD software	03	Total number of Hours	32 hours

EXECUTION SCHEDULE

Module No.	Name of the Module	No. of Hours
1	Introduction to NX CAD	02
2	Sketcher	06
3	Part Modeling	12
4	Assembly Design	12
5	Drafting and Detailing	08
6	Generative Sheet metal Design	12
7	Surface Modeling	12

Detailed Execution Plan

Name of the Course Module: 1. Introduction to NX CAD

Duration: 02 hours

Module No.	Name of the Module	Teaching	Practical	Self-Study	Course Plan (Day wise)
1.1	Introduction to Unigraphics NX, About NX Gateway, Getting Started, NX Graphical User Interface - Title bar, Menu bar, Toolbar, Radial toolbar, Selection bar, Cue and status line, Dialog rail, Resource bar, Navigators,HD3D tools,	1	1	-	Day1

PRINCIPAL,
Knowledge Institute of Technology
Kakapalayam (PO) Salem - 637 504

	Integrated browser, Palettes, Roles, Full screen, View orientation- trimetric, isometric, View commands, Rotate ,Pan, Zoom in/out, Quick pick, Quick pick, categories, Coordinate system- absolute coordinate system, WCS, Absolute coordinate, Work coordinate system. View triad, Multiple graphics window, Information window, Keyboard accelerators, Dialog box File management - Creating new files , Opening files and Saving files				

Detailed Execution Plan

Name of the Course Module: 2.SKETCHER

Duration: 06 hours

Module No.	Name of the Module	Teaching	Practical	Self-Study	Course Plan (Day wise)
2.1	Creating Sketches - Profile, Line, Arc, Circle, Fillet, Chamfer, Rectangle, Polygon, Studio Spline, Fit spline, Ellipse, Conic Editing sketches - Quick trim, Quick extend, Make corner, Offset curve, Pattern curve, Mirror curve, Intersection point,	1	2	-	Day 2
2.2	Derived lines Constraints - Geometric constraints, Auto constraint, Inferred constraint, Dimensional constraints, Auto dimension, Animate dimension, Continuous auto dimension	1	2	-	Day 3

PRINCIPAL,
Knowledge Institute of Technology
Kakapalayam (PO) Salem - 637 504

Detailed Execution Plan

Name of the Course Module: 3.PART MODELING

Duration: 12 hours

Module No.	Name of the Module	Teaching	Practical	Self-Study	Course Plan (Day wise)
3.1	Basic terminologies - Feature, Body, Solid body, Sheet, Face, Section curves, Guide curves. Creating Primitives - Block, Cylinder, Cone, Sphere, Boss, Pocket, Emboss, Slot, Groove.	1	2	-	Day 4
3.2	Feature modeling commands-Creating Extrude features, Creating Revolve features. Datums-Craeting Datum planes, Axis, Point.	1	2	-	Day 5
3.3	Creating Sweep Features-Swept, Sweep along guide, variable sweep, Creating Tube feature General hole, Drill size holes, Screw clearance holes, Threaded holes, Dart, Thread, Shell, Draft, Draft body, Scale Creating Blend and Chamfer. Instance feature	1	2	-	Day 6
3.4	Rectangular array, Circular array, Pattern face, Mirror feature, Mirror body Feature Operations -To Divide face, Trim body, Split body,Boolean commands, User defined feature, Creating Feature group, Layer settings, To measure distance between geometries, To measure	1	2	-	Day 7

PRINCIPAL.
Knowledge Institute of Technology
Kakapalayam (PO), Salem - 637 504

	angle between geometries, To measure bodies and face geometries, To find geometric properties. Synchronous Modeling				

Detailed Execution Plan Name of the Course Module: 4. Assembly Design Duration: 12 hours					
Module No.	**Name of the Module**	**Teaching**	**Practical**	**Self-Study**	**Course Plan (Day wise)**
4.1	Introduction to Assembly modeling Assembly approaches. Assembly constrains - Angle, Bond, Centre	1	2	-	Day 8
4.2	Concentric, Distance, Fit, Parallel, Perpendicular, Touch align Component array - Linear array, Circular array, Feature instance array. Moving a component	1	2	-	Day 9
4.3	Replacing component, Repositioning component, Mirroring assembly. Creating a New Component, Creating new parent, Assembly clearance, Creating	1	2	-	Day 10
4.4	Exploded views, Assembly sequencing with motion. Creating deformable parts, Finding degrees of freedom. Assembly envelopes	1	2		Day 11

PRINCIPAL
Knowledge Institute of Technology
Kakapalayam (PO) Salem - 637

Detailed Execution Plan

Name of the Course Module: 5. Drafting and Detailing

Duration: 08 hours

Module No.	Name of the Module	Teaching	Practical	Self-Study	Course Plan (Day wise)
5.1	Craeting Sheets, Editing the Sheet, Stadard settings. Creating drawing views- Base view, Drawing view, projected view. Section view- Simple section, Stepped section , Half section, Revolved section, Folded section, Unfolded section, Pictorial section, Half pictorial section, Break out section Detail view Creating Broken view.	1	1	-	Day 1
5.2	Appling dimensions- Inferred Dimension, Horizontal Dimension, Vertical Dimension, Parallel Dimension, Perpendicular dimension, Angular dimension, Cylindrical Dimension, Hole dimension, Diameter Dimension, Chamfer Dimension, Radius or Radius of Curvature Dimension, Radius to Centre, Folded Radius, Thickness Dimension, Arc Length, Horizontal Chain Dimension, Vertical Chain Dimension, Horizontal Baseline Dimension, Vertical Baseline Dimension, Ordinate Dimension.	1	2	-	Day 2

PRINCIPAL,
Knowledge Institute of Technology
Kakapalayam (PO) Salem - 637 504

5.3	Creating Annotations,Datum feature, symbols, feature control frame, placing datum target symbol. Creating Ceterline, Axis, Hatch and Fill options Creating Table and Partlist.	1	2	-	Day 3

Detailed Execution Plan

Name of the Course Module: 6. Generative Sheet metal Design

Duration: 12 hours

Module No.	Name of the Module	Teaching	Practical	Self-Study	Course Plan (Day wise)
6.1	NX Sheet Metal Preferences Creating base feature -Tab. Creating bend- Attaching flange, Attaching Contour flange.	2	4	-	Day 4 & 5
6.2	Creating Lofted flange, Inserting Hem flange, Apply Bend, unbend, rebend, Apply Jog. Creating Sheet metal from solid Applying Closed corner, Break corner, Applying chamfer	2	4	-	Day 6 & 7

Detailed Execution Plan

Name of the Course Module: 7. Surface Modeling

Duration: 12 hours

Module No.	Name of the Module	Teaching	Practical	Self-Study	Course Plan (Day wise)
7.1	Creating curves from curves Creating curve from bodies Extract body,	2	4	-	Day 8 & 9

PRINCIPAL,
Knowledge Institute of Technology
Kakapalayam (PO) Salem - 637 504

	Composite curve Surface Modeling commands - Extrude, Revolve, Sweep, Swept.				
7.2	Surface using curves - Surface by Through curves, Surface by Through curve mesh, Creating Studio surface, Surface from Section Surface, Surface creation by N-Sided surface.	2	4	-	Day 10 & 11

Faculty I/C

HOD MECH

PRINCIPAL.
Knowledge Institute of Technology
Kakapalayam (PO) Salem - 637 504

KNOWLEDGE INSTITUTE OF TECHNOLOGY, SALEM-637504
DEPARTMENT OF MECHANICAL ENGINEERING
HARITA TECH SERV-CERTIFICATE COURSE
SOLID MODELING (LEVEL-2) USING NXCAD SOFTWARE
NAME LIST

S.NO	SEC	REG. NO	NAME	YEAR	Remarks
1	B	611215114010	ARAVINTH N	IV/VII	
2	A	611215114012	ARUL PRAKASAM S R	IV/VII	
3	B	611215114018	ASWIN PRASAD V	IV/VII	
4	B	611215114019	BALAJI A.R	IV/VII	
5	B	611215114030	DHAMOTHARAN S	IV/VII	
6	B	611215114034	DHATCHINA MURTHI G	IV/VII	
7	B	611215114035	DHEVA K	IV/VII	
8	A	611215114109	MANORANJAN P	IV/VII	
9	A	611215114111	MEGATHESH R	IV/VII	
10	A	611215114118	MOHANKUMAR M	IV/VII	
11	A	611215114126	MURALIMANOHAR S	IV/VII	
12	A	611215114127	MURUGAVELU U K	IV/VII	
13	A	611215114132	NAGARAJ R	IV/VII	
14	A	611215114133	NANDHAKUMAR E	IV/VII	
15	D	611215114135	NIHALYA DEVI S S	IV/VII	
16	B	611215114138	NIVESH B	IV/VII	
17	D	611215114139	PADMANABAN M	IV/VII	
18	B	611215114140	PARI ALAGHAN E	IV/VII	
19	A	611215114141	PARTHA SARATHY D	IV/VII	
20	D	611215114144	PERIYASAMY C	IV/VII	
21	A	611215114145	POOVARASAN K	IV/VII	
22	B	611215114147	PRABHU S	IV/VII	
23	B	611215114148	PRADEEP C	IV/VII	
24	D	611215114162	RAJKUMAR R K	IV/VII	
25	D	611215114166	RAMPRATHAP S	IV/VII	
26	D	611215114168	RANJITHKUMAR R	IV/VII	
27	D	611215114171	REENA M	IV/VII	
28	D	611215114172	ROHITH KUMAR R	IV/VII	
29	D	611215114178	SANTHASEELAN S	IV/VII	
30	D	611215114190	SATHISHKUMAR G	IV/VII	
31	D	611215114193	SATHISH KUMAR R	IV/VII	
32	C	611215114222	THIYAGARAJAN S	IV/VII	
33	C	611215114227	VIGNESH V	IV/VII	
34	C	611215114229	VIGNESH (22.06.1998) R	IV/VII	
35	C	611215114230	VIGNESH (25.08.1998) R	IV/VII	

PRINCIPAL,
Knowledge Institute of Technology
Kakapalayam (PO) Salem - 637 504

36	C	611215114235	VIJAY S	IV/VII	
37	C	611215114240	VINOTH KUMAR S	IV/VII	
38	C	611215114241	VINOTHKUMAR (31.07.1998) S	IV/VII	
39	C	611215114242	VISHAL V B	IV/VII	
40	C	611215114308	DINESH N	IV/VII	
41	C	611215114309	DINESH KUMAR S	IV/VII	
42	C	611215114310	ELANGOVAN V	III/VI	

FACULTY INCHARGE

HOD

PRINCIPAL
Knowledge Institute of Technology
Kakapalayam (PO) Salem - 637 504

KNOWLEDGE INSTITUTE OF TECHNOLOGY, SALEM-637504
DEPARTMENT OF MECHANICAL ENGINEERING
HARITA TECHSERV-CERTIFICATE COURSE
SOLID MODELING (LEVEL-2) USING NXCAD SOFTWARE
TRAINING ATTENDANCE SHEET (16.07.2018 to 28.07.2018)

S.NO	SEC	REG. NO	NAME	YEAR	16.07.2018	17.07.2018	18.07.2018	19.07.2018	20.07.2018	23.07.2018
1	B	611215114010	ARAVINTH N	IV/VII	/	/	/	/	/	/
2	A	611215114012	ARUL PRAKASAM S R	IV/VII	/	/	/	/	/	/
3	B	611215114018	ASWIN PRASAD V	IV/VII	/	/	/	/	/	/
4	B	611215114019	BALAJI A.R	IV/VII	/	/	/	/	/	/
5	B	611215114030	DHAMOTHARAN S	IV/VII	/	/	/	/	/	/
6	B	611215114034	DHATCHINA MURTHI G	IV/VII	/	/	/	/	/	/
7	B	611215114035	DHEVA K	IV/VII	/	/	/	/	/	/
8	A	611215114109	MANORANJAN P	IV/VII	/	/	/	/	/	/
9	A	611215114111	MEGATHESH R	IV/VII	/	/	/	/	/	/
10	A	611215114118	MOHANKUMAR M	IV/VII	/	/	/	/	/	/
11	A	611215114126	MURALIMANOHAR S	IV/VII	/	/	/	a	/	/
12	A	611215114127	MURUGAVELU U K	IV/VII	/	/	/	/	/	/
13	A	611215114132	NAGARAJ R	IV/VII	/	/	/	/	/	/
14	A	611215114133	NANDHAKUMAR E	IV/VII	/	/	/	/	/	/
15	D	611215114135	NIHALYA DEVI S S	IV/VII	/	/	/	/	/	/
16	B	611215114138	NIVESH B	IV/VII	/	/	/	/	/	/
17	D	611215114139	PADMANABAN M	IV/VII	/	/	/	/	/	/
18	B	611215114140	PARI ALAGHAN E	IV/VII	/	/	/	/	/	/
19	A	611215114141	PARTHA SARATHY D	IV/VII	/	/	/	/	/	/
20	D	611215114144	PERIYASAMY C	IV/VII	/	/	/	/	/	/
21	A	611215114145	POOVARASAN K	IV/VII	/	/	/	/	/	/
22	B	611215114147	PRABHU S	IV/VII	a	/	/	/	/	/
23	B	611215114148	PRADEEP C	IV/VII	/	/	/	/	/	/
24	D	611215114162	RAJKUMAR R K	IV/VII	/	/	a	/	/	/
25	D	611215114166	RAMPRATHAP S	IV/VII	/	/	/	/	/	/
26	D	611215114168	RANJITHKUMAR R	IV/VII	/	/	/	/	/	/
27	D	611215114171	REENA M	IV/VII	/	/	/	/	/	/
28	D	611215114172	ROHITH KUMAR R	IV/VII	/	/	/	/	/	/
29	D	611215114178	SANTHASEELAN S	IV/VII	/	/	/	a	/	/
30	D	611215114190	SATHISHKUMAR G	IV/VII	/	/	/	/	/	/
31	D	611215114193	SATHISH KUMAR R	IV/VII	/	/	/	/	/	/
32	C	611215114222	THIYAGARAJAN S	IV/VII	/	/	/	/	/	/
33	C	611215114227	VIGNESH V	IV/VII	/	/	/	a	a	/
34	C	611215114229	VIGNESH (22.06.1998) R	IV/VII	/	/	/	/	/	/
35	C	611215114230	VIGNESH (25.08.1998) R	IV/VII	/	/	/	/	/	/
36	C	611215114235	VIJAY S	IV/VII	/	/	/	/	/	/
37	C	611215114240	VINOTH KUMAR S	IV/VII	/	/	/	/	/	/
38	C	611215114241	VINOTHKUMAR (31.07.1998) S	IV/VII	/	/	/	/	/	/
39	C	611215114242	VISHAL V B	IV/VII	/	/	/	/	/	/
40	C	611215114308	DINESH N	IV/VII	/	/	/	/	/	/
41	C	611215114309	DINESH KUMAR S	IV/VII	/	/	/	/	/	/
42	C	611215114310	ELANGOVAN V	IV/VII	/	/	/	/	/	/
No. of Students Present					41	42	41	42	41	42
No. of Students Absent					01	-	1	2	1	-
Faculty Signature										

FACULTY INCHARGE

PRINCIPAL
Knowledge Institute of Technology
Kakapalayam (PO) Salem - 637 504

HOD MECHANICAL

KNOWLEDGE INSTITUTE OF TECHNOLOGY, SALEM-637504
DEPARTMENT OF MECHANICAL ENGINEERING
HARITA TECHSERV-CERTIFICATE COURSE
SOLID MODELING (LEVEL-2) USING NXCAD SOFTWARE
TRAINING ATTENDANCE SHEET (16.07.2018 to 28.07.2018)

S.NO	SEC	REG. NO	NAME	YEAR	24.07.2018	25.07.2018	26.07.2018	27.07.2018	28.07.2018
1	B	611215114010	ARAVINTH N	IV/VII	/	/	/	/	/
2	A	611215114012	ARUL PRAKASAM S R	IV/VII	/	/	/	/	/
3	B	611215114018	ASWIN PRASAD V	IV/VII	/	/	/	/	/
4	B	611215114019	BALAJI A.R	IV/VII	/	/	/	/	/
5	B	611215114030	DHAMOTHARAN S	IV/VII	/	/	/	/	/
6	B	611215114034	DHATCHINA MURTHI G	IV/VII	/	/	/	/	/
7	B	611215114035	DHEVA K	IV/VII	/	/	/	/	/
8	A	611215114109	MANORANJAN P	IV/VII	/	/	/	/	/
9	A	611215114111	MEGATHESH R	IV/VII	/	/	/	/	/
10	A	611215114118	MOHANKUMAR M	IV/VII	/	/	/	/	/
11	A	611215114126	MURALIMANOHAR S	IV/VII	a	/	/	/	/
12	A	611215114127	MURUGAVELU U K	IV/VII	/	/	/	/	/
13	A	611215114132	NAGARAJ R	IV/VII	/	/	/	/	/
14	A	611215114133	NANDHAKUMAR E	IV/VII	/	/	a	/	/
15	D	611215114135	NIHALYA DEVI S S	IV/VII	/	/	/	/	/
16	B	611215114138	NIVESH B	IV/VII	/	/	/	/	/
17	D	611215114139	PADMANABAN M	IV/VII	/	/	/	/	/
18	B	611215114140	PARI ALAGHAN E	IV/VII	/	/	/	/	/
19	A	611215114141	PARTHA SARATHY D	IV/VII	/	/	/	/	/
20	D	611215114144	PERIYASAMY C	IV/VII	/	/	/	/	/
21	A	611215114145	POOVARASAN K	IV/VII	/	/	/	/	/
22	B	611215114147	PRABHU S	IV/VII	/	a	/	/	/
23	B	611215114148	PRADEEP C	IV/VII	/	/	/	/	/
24	D	611215114162	RAJKUMAR R K	IV/VII	/	/	/	/	/
25	D	611215114166	RAMPRATHAP S	IV/VII	/	/	/	/	/
26	D	611215114168	RANJITHKUMAR R	IV/VII	/	/	/	/	/
27	D	611215114171	REENA M	IV/VII	/	/	a	a	/
28	D	611215114172	ROHITH KUMAR R	IV/VII	/	/	/	/	/
29	D	611215114178	SANTHASEELAN S	IV/VII	/	/	/	/	/
30	D	611215114190	SATHISHKUMAR G	IV/VII	/	/	/	/	/
31	D	611215114193	SATHISH KUMAR R	IV/VII	/	/	/	/	/
32	C	611215114222	THIYAGARAJAN S	IV/VII	/	/	/	/	/
33	C	611215114227	VIGNESH V	IV/VII	/	/	/	/	/
34	C	611215114229	VIGNESH (22.06.1998) R	IV/VII	/	/	/	/	/
35	C	611215114230	VIGNESH (25.08.1998) R	IV/VII	/	/	a	/	/
36	C	611215114235	VIJAY S	IV/VII	/	/	/	/	/
37	C	611215114240	VINOTH KUMAR S	IV/VII	/	/	/	/	/
38	C	611215114241	VINOTHKUMAR (31.07.1998) S	IV/VII	/	/	/	/	/
39	C	611215114242	VISHAL V B	IV/VII	/	/	/	/	/
40	C	611215114308	DINESH N	IV/VII	/	/	/	/	/
41	C	611215114309	DINESH KUMAR S	IV/VII	/	/	/	/	/
42	C	611215114310	ELANGOVAN V	III/VI	/	/	/	/	/
No. of Students Present					A1	A1	39	A1	A2
No. of Students Absent					1	1	3	1	—
Faculty Signature									

FACULTY INCHARGE

PRINCIPAL,
Knowledge Institute of Technology
Kakapalayam (PO) Salem - 637 504

HOD MECHANICAL

KNOWLEDGE INSTITUTE OF TECHNOLOGY, SALEM
Department Of Mechanical Engineering

EVALUATION FORM-CERTIFICATE COURSE
Solid Modeling (Level-2) using CATIA & NXCAD software

Name: Manoranjan . P	Reg. No: 611215114109	Year/Sem/Sec: IV/VII

ASSESSMENT TEST

S.NO.	DESCRIPTION	MARKS ALLOTED	MARKS OBTAINED
1	PART-A (SKETCHER)	25	25
2	SURFACE DESIGN	50	50
3	DETAILING	25	20
TOTAL MARKS		100	95

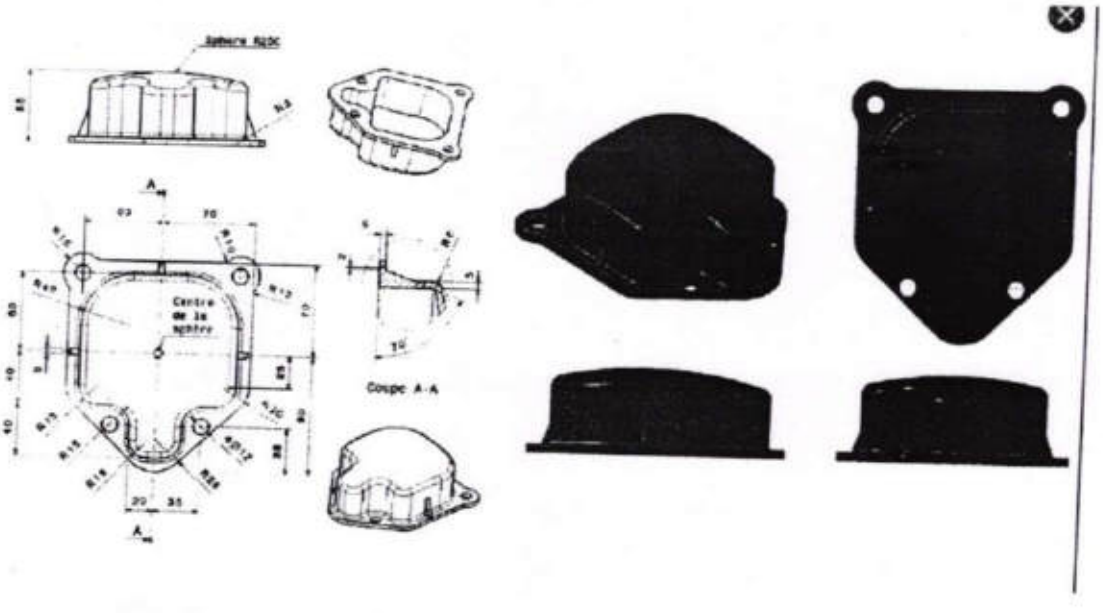

PRINCIPAL,
Knowledge Institute of Technology
Kakapalayam (PO) Salem - 637 504

KNOWLEDGE INSTITUTE OF TECHNOLOGY, SALEM
Department Of Mechanical Engineering

EVALUATION FORM-CERTIFICATE COURSE
Solid Modeling (Level-2) using CATIA & NXCAD software

Name: Pabiabaghan.E | Reg. No: 611215114140 | Year/Sem/Sec: IV / VII

ASSESSMENT TEST

S.NO.	DESCRIPTION	MARKS ALLOTED	MARKS OBTAINED
1	PART-A (SKETCHER)	25	20
2	SURFACE DESIGN	50	50
3	DETAILING	25	20
TOTAL MARKS		100	90

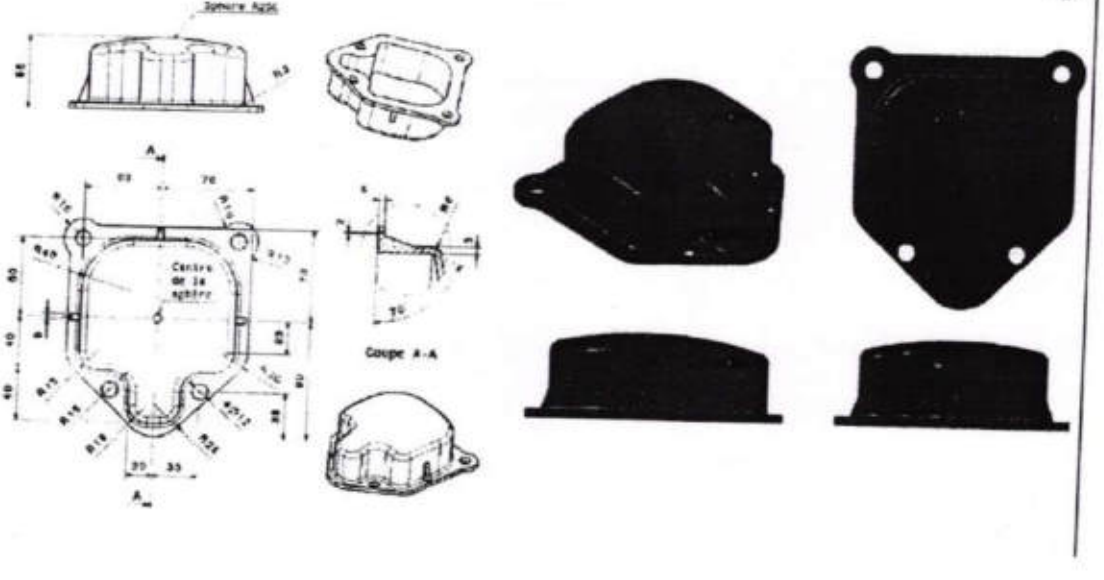

PRINCIPAL,
Knowledge Institute of Technology
Kakapalayam (PO) Salem - 637 504

KNOWLEDGE INSTITUTE OF TECHNOLOGY, SALEM
Department Of Mechanical Engineering

EVALUATION FORM-CERTIFICATE COURSE
Solid Modeling (Level-2) using CATIA & NXCAD software

Name: D. Parthasarathy | Reg. No: 611215114141 | Year/Sem/Sec: IV VII

ASSESSMENT TEST

S.NO.	DESCRIPTION	MARKS ALLOTED	MARKS OBTAINED
1	PART-A (SKETCHER)	25	15
2	SURFACE DESIGN	50	25
3	DETAILING	25	15
TOTAL MARKS		100	55

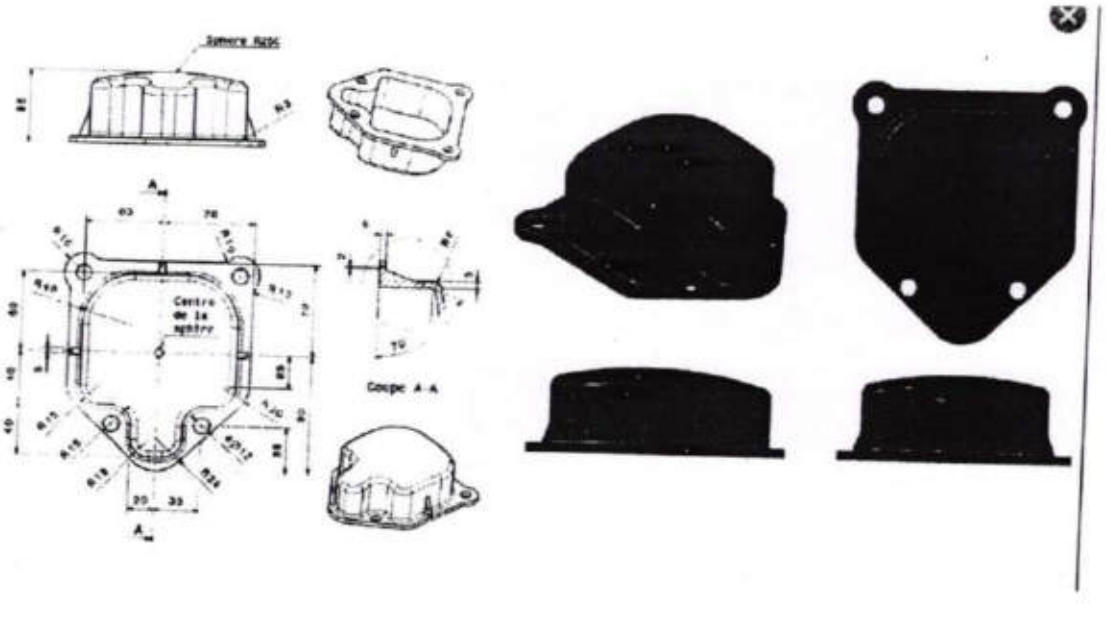

PRINCIPAL,
Knowledge Institute of Technology
Kakapalayam (PO) Salem - 637 504

KNOWLEDGE INSTITUTE OF TECHNOLOGY, SALEM
Department Of Mechanical Engineering

EVALUATION FORM-CERTIFICATE COURSE
Solid Modeling (Level-2) using CATIA & NXCAD software

Name: K. Poorvarasan | Reg. No: 611215114145 | Year/Sem/Sec: IV / VII

ASSESSMENT TEST

S.NO.	DESCRIPTION	MARKS ALLOTED	MARKS OBTAINED
1	PART-A (SKETCHER)	25	20
2	SURFACE DESIGN	50	45
3	DETAILING	25	20
TOTAL MARKS		100	85

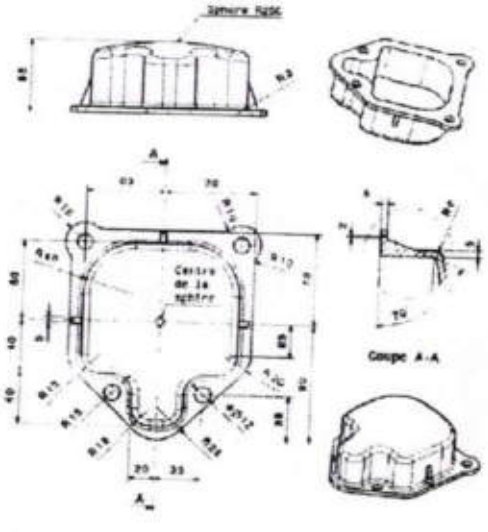

PRINCIPAL,
Knowledge Institute of Technology
Kakapalayam (PO) Salem - 637 504

KNOWLEDGE INSTITUTE OF TECHNOLOGY, SALEM
Department Of Mechanical Engineering

EVALUATION FORM-CERTIFICATE COURSE
Solid Modeling (Level-2) using CATIA & NXCAD software

Name: Vignesh. R. | Reg. No: 6121114230 | Year/Sem/Sec: IV / VII

ASSESSMENT TEST

S.NO.	DESCRIPTION	MARKS ALLOTED	MARKS OBTAINED
1	PART-A (SKETCHER)	25	20
2	SURFACE DESIGN	50	35
3	DETAILING	25	25
TOTAL MARKS		100	80

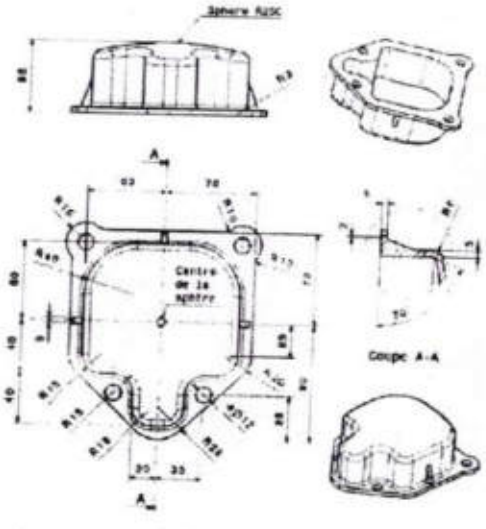

PRINCIPAL,
Knowledge Institute of Technology
Kakapalayam (PO), Salem - 637 504

KNOWLEDGE INSTITUTE OF TECHNOLOGY, SALEM-637504
DEPARTMENT OF MECHANICAL ENGINEERING
HARITA TECH SERV-CERTIFICATE COURSE
SOLID MODELING (LEVEL-2) USING NXCAD SOFTWARE
EVALUATION MARKS

S.NO	SEC	REG. NO	NAME	YEAR	MARKS (100)
1	B	611215114010	ARAVINTH N	IV/VII	65
2	A	611215114012	ARUL PRAKASAM S R	IV/VII	80
3	B	611215114018	ASWIN PRASAD V	IV/VII	95
4	B	611215114019	BALAJI A.R	IV/VII	90
5	B	611215114030	DHAMOTHARAN S	IV/VII	90
6	B	611215114034	DHATCHINA MURTHI G	IV/VII	65
7	B	611215114035	DHEVA K	IV/VII	50
8	A	611215114109	MANORANJAN P	IV/VII	95
9	A	611215114111	MEGATHESH R	IV/VII	55
10	A	611215114118	MOHANKUMAR M	IV/VII	70
11	A	611215114126	MURALIMANOHAR S	IV/VII	75
12	A	611215114127	MURUGAVELU U K	IV/VII	90
13	A	611215114132	NAGARAJ R	IV/VII	95
14	A	611215114133	NANDHAKUMAR E	IV/VII	60
15	D	611215114135	NIHALYA DEVI S S	IV/VII	55
16	B	611215114138	NIVESH B	IV/VII	85
17	D	611215114139	PADMANABAN M	IV/VII	70
18	B	611215114140	PARI ALAGHAN E	IV/VII	90
19	A	611215114141	PARTHA SARATHY D	IV/VII	55
20	D	611215114144	PERIYASAMY C	IV/VII	80
21	A	611215114145	POOVARASAN K	IV/VII	85
22	B	611215114147	PRABHU S	IV/VII	90
23	B	611215114148	PRADEEP C	IV/VII	90
24	D	611215114162	RAJKUMAR R K	IV/VII	65
25	D	611215114166	RAMPRATHAP S	IV/VII	75
26	D	611215114168	RANJITHKUMAR R	IV/VII	80
27	D	611215114171	REENA M	IV/VII	90
28	D	611215114172	ROHITH KUMAR R	IV/VII	95
29	D	611215114178	SANTHASEELAN S	IV/VII	80
30	D	611215114190	SATHISHKUMAR G	IV/VII	75
31	D	611215114193	SATHISH KUMAR R	IV/VII	75
32	C	611215114222	THIYAGARAJAN S	IV/VII	85
33	C	611215114227	VIGNESH V	IV/VII	80
34	C	611215114229	VIGNESH (22.06.1998) R	IV/VII	95
35	C	611215114230	VIGNESH (25.08.1998) R	IV/VII	80

PRINCIPAL
Knowledge Institute of Technology
Kanjapalayam (PO) Salem - 637 504

36	C	611215114235	VIJAY S	IV/VII	75
37	C	611215114240	VINOTH KUMAR S	IV/VII	85
38	C	611215114241	VINOTHKUMAR (31.07.1998) S	IV/VII	70
39	C	611215114242	VISHAL V B	IV/VII	80
40	C	611215114308	DINESH N	IV/VII	90
41	C	611215114309	DINESH KUMAR S	IV/VII	90
42	C	611215114310	ELANGOVAN V	III/VI	75

FACULTY INCHARGE

HOD

KNOWLEDGE INSTITUTE OF TECHNOLOGY
Accredited by NAAC

HARITA TECHSERV LIMITED

Certificate of Completion

This certificate is awarded to

ASWINPRASAD.V (611215114018)

In recognition of sucessful completion of

PRINCIPAL
Knowledge Institute of Technology
Kakapalayam (PO) Salem - 637 504

"Solid Modeling (Level-2) using NXCAD software"

Conducted by "CRCPDT-Harita Techserv Limited" from 16.07.2018 to 28.07.2018 Department of Mechanical Engineering, Knowledge Institute of Technology salem, Tamilnadu, India

Mr.M.Sathyanathan
Coordinator

Dr.K.Visagavel
HOD/Mechanical

Dr.PSS.Srinivasan
Principal

R.Shankarnarayanan
COO/Harita Techserv Limited

KNOWLEDGE INSTITUTE OF TECHNOLOGY
Accredited by NAAC

HARITA TECHSERV LIMITED

Certificate of Completion

This certificate is awarded to

MEGATHESH.R (611215114111)

In recognition of sucessful completion of

"Solid Modeling (Level-2) using NXCAD software"

PRINCIPAL
Knowledge Institute of Technology
Kakapalayam (PO) Salem - 637 504

Conducted by "CRCPDT-Harita Techserv Limited" from 16.07.2018 to 28.07.2018
Department of Mechanical Engineering, Knowledge Institute of Technology salem, Tamilnadu, India

Mr.M.Sathyanathan	Dr.K.Visagavel	Dr.PSS.Srinivasan	R.Shankarnarayanan
Coordinator	HOD/Mechanical	Principal	COO/Harita Techserv Limited

KNOWLEDGE INSTITUTE OF TECHNOLOGY
Accredited by NAAC

HARITA TECHSERV LIMITED

Certificate of Completion

This certificate is awarded to

NIVESH.B (611215114138)

In recognition of sucessful completion of

"Solid Modeling (Level-2) using NXCAD software"

PRINCIPAL
Knowledge Institute of Technology
Kakapalayam (PO) Salem - 637 504

Conducted by "CRCPDT-Harita Techserv Limited" from 16.07.2018 to 28.07.2018 Department of Mechanical Engineering, Knowledge Institute of Technology salem, Tamilnadu, India

Mr.M.Sathyanathan	Dr.K.Visagavel	Dr.PSS.Srinivasan	R.Shankarnarayanan
Coordinator	HOD/Mechanical	Principal	COO/Harita Techserv Limited

KNOWLEDGE INSTITUTE OF TECHNOLOGY
Accredited by NAAC

HARITA TECHSERV LIMITED

Certificate of Completion

This certificate is awarded to

VIGNESH.V (611215114227)

In recognition of sucessful completion of

PRINCIPAL,
Knowledge Institute of Technology
Kakapalayam (PO), Salem - 637 504

"Solid Modeling (Level-2) using NXCAD software"

Conducted by "CRCPDT-Harita Techserv Limited" from 16.07.2018 to 28.07.2018 Department of Mechanical Engineering, Knowledge Institute of Technology salem, Tamilnadu, India

Mr.M.Sathyanathan	Dr.K.Visagavel	Dr.PSS.Srinivasan	R.Shankarnarayanan
Coordinator	HOD/Mechanical	Principal	COO/Harita Techserv Limited

KNOWLEDGE INSTITUTE OF TECHNOLOGY
Accredited by NAAC

HARITA TECHSERV LIMITED

Certificate of Completion

This certificate is awarded to

DINESH.N (611215114308)

In recognition of sucessful completion of

"Solid Modeling (Level-2) using NXCAD software"

PRINCIPAL,
Knowledge Institute of Technology
Kakapalayam (PO) Salem - 637 504

Conducted by "CRCPDT-Harita Techserv Limited" from 16.07.2018 to 28.07.2018 Department of Mechanical Engineering, Knowledge Institute of Technology salem, Tamilnadu, India

Mr.M.Sathyanathan	Dr.K.Visagavel	Dr.PSS.Srinivasan	R.Shankarnarayanan
Coordinator	HOD/Mechanical	Principal	COO/Harita Techserv Limited

KNOWLEDGE INSTITUTE OF TECHNOLOGY, SALEM
Department Of Mechanical Engineering

FEEDBACK FORM-CERTIFICATE COURSE

Solid Modeling (Level-2) using NXCAD/CATIA software

Name: U.K. MURUGAVELU Year/Sem/Sec: IV / VII

S.No.	List of Content	Strongly Agree	Agree	Neutral	Disagree	Strongly Disagree
1	Drafting and Detailing	✓	✓			
2	Generative Sheet metal Design		✓			
3	Generative Shape Design		✓			
4	Course content and Hands on Experience of CATIA V5	✓				
5	Trainer Explanation level about this course	✓				
6	Have you learned Shortcuts of the Tool and worked out Industry Drawings	✓				
7	Overall Experience about this course		✓			

Suggestion for Improvement

U. K. Murugavelu.
Signature of the Candidate

PRINCIPAL
Knowledge Institute of Technology
Kakapalayam (PO) Salem - 637 504

KNOWLEDGE INSTITUTE OF TECHNOLOGY, SALEM
Department Of Mechanical Engineering

FEEDBACK FORM-CERTIFICATE COURSE

Solid Modeling (Level-2) using NXCAD/CATIA software

Name: ASWIN PRASAD. S.R Year/Sem/Sec: IV / VII

S.No.	List of Content	Strongly Agree	Agree	Neutral	Disagree	Strongly Disagree
1	Drafting and Detailing	✓				
2	Generative Sheet metal Design		✓			
3	Generative Shape Design			✓		
4	Course content and Hands on Experience of CATIA V5			✓		
5	Trainer Explanation level about this course			✓		
6	Have you learned Shortcuts of the Tool and worked out Industry Drawings		✓			
7	Overall Experience about this course		✓			

Suggestion for Improvement

S. R. Aswin Prasad
Signature of the Candidate

PRINCIPAL,
Knowledge Institute of Technology
Kakapalayam (PO) Salem - 637 504

KNOWLEDGE INSTITUTE OF TECHNOLOGY, SALEM
Department Of Mechanical Engineering

FEEDBACK FORM-CERTIFICATE COURSE

Solid Modeling (Level-2) using NXCAD/CATIA software

Name: V. Elangovan Year/Sem/Sec: IV VII

S.No.	List of Content	Strongly Agree	Agree	Neutral	Disagree	Strongly Disagree
1	Drafting and Detailing	✓				
2	Generative Sheet metal Design		✓			
3	Generative Shape Design			✓		
4	Course content and Hands on Experience of CATIA V5		✓			
5	Trainer Explanation level about this course		✓			
6	Have you learned Shortcuts of the Tool and worked out Industry Drawings			✓		
7	Overall Experience about this course		✓			

Suggestion for Improvement

PRINCIPAL,
Knowledge Institute of Technology
Kakapalayam (PO) Salem - 637 504

Signature of the Candidate

KNOWLEDGE INSTITUTE OF TECHNOLOGY, SALEM
Department Of Mechanical Engineering

FEEDBACK FORM-CERTIFICATE COURSE

Solid Modeling (Level-2) using NXCAD/CATIA software

Name: S. VINOTHIGUMAR Year/Sem/Sec: IV / VII

S.No.	List of Content	Strongly Agree	Agree	Neutral	Disagree	Strongly Disagree
1	Drafting and Detailing	✓				
2	Generative Sheet metal Design		✓			
3	Generative Shape Design			✓		
4	Course content and Hands on Experience of CATIA V5		✓			
5	Trainer Explanation level about this course		✓			
6	Have you learned Shortcuts of the Tool and worked out Industry Drawings		✓			
7	Overall Experience about this course	✓				

Suggestion for Improvement

Signature of the Candidate

PRINCIPAL,
Knowledge Institute of Technology
Kakapalayam (PO) Salem - 637 504

KNOWLEDGE INSTITUTE OF TECHNOLOGY, SALEM
Department Of Mechanical Engineering

FEEDBACK FORM-CERTIFICATE COURSE

Solid Modeling (Level-2) using NXCAD/CATIA software

Name: C. Periyasamy Year/Sem/Sec: IV / VII

S.No.	List of Content	Strongly Agree	Agree	Neutral	Disagree	Strongly Disagree
1	Drafting and Detailing	✓				
2	Generative Sheet metal Design		✓			
3	Generative Shape Design			✓		
4	Course content and Hands on Experience of CATIA V5		✓			
5	Trainer Explanation level about this course			✓		
6	Have you learned Shortcuts of the Tool and worked out Industry Drawings				✓	
7	Overall Experience about this course		✓			

Suggestion for Improvement

Signature of the Candidate

PRINCIPAL,
Knowledge Institute of Technology
Kakapalayam (PO) Salem - 637 504

KNOWLEDGE INSTITUTE OF TECHNOLOGY, SALEM – 637 504
Approved by AICTE, Affiliated to Anna University, Chennai.

Beyond Knowledge

Report of Program / Event Conducted

Name of the Program / Event		Solid Modeling (Level-2) using CATIA & NXCAD software	
Resource Person details		Mr..S.SANTHOSH & Mr.KV.RANGASAMY Assistant Professor, Dept. of Mechanical Engg. KIOT	
Organizing Dept. / Cell	Mechanical	Details of Participant	IV Students = 102
Date, Time and Venue	16.07.2018-28.07.2018 COE – CRCPDT, A-Block, KIOT.		

Description of the program

1. He discussed about 3 features of CATIA & NXCAD software. It contains CATIA & NXCAD Advanced level.
2. He explained about drafting and detailing, generative sheet metal design and generative shape design.
3. Also he explained about Geometric Dimensioning and Tolerancing (GD&T).
4. He shared his personal experiences and difficulties he faced in his Industrial Career.

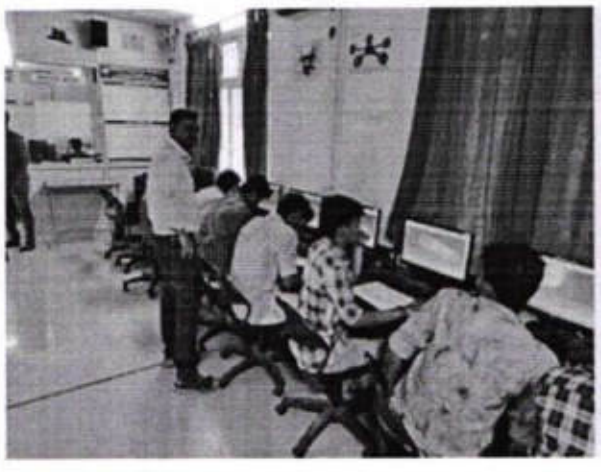

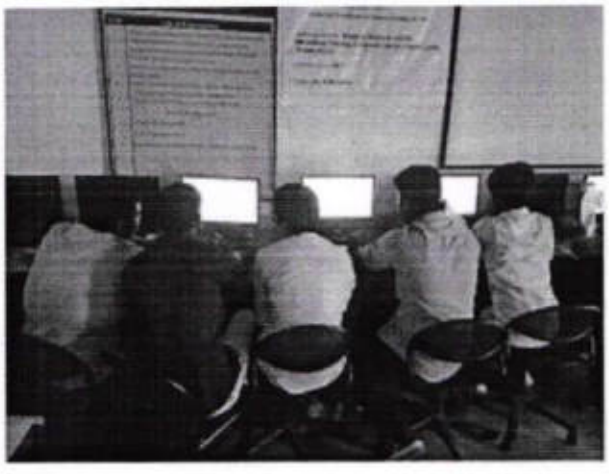

Principal,
Knowledge Institute of Technolo
Kakapalayam (Po), Salem-637

From

J.Prakash,
Assistant Professor
Department of Mechanical Engineering,
Knowledge Institute of Technology,
Salem.

To

The Principal,
Knowledge Institute of Technology,
Salem .

Through: Head of the Department, Department of Mechanical Engineering

Respected Sir,

Sub: Certification Course conduction–regarding

Composite research Centre for Product Design, Digital Manufacturing and Technical Documentation (CRCPDT) and Designers club is jointly organizing Solid Modeling (Level-2) using CATIA software. In this regard, I request your permission to execute the Certificate course for Mechanical Engineering students.

Thanking You

Yours Faithfully

J.Prakash

Salem

04.07.2018

Forwarded to the Principal

PRINCIPAL,
Knowledge Institute of Technology
Kakapalayam (PO) Salem - 637 504

KNOWLEDGE INSTITUTE OF TECHNOLOGY, SALEM - 637 504			
CIRCULAR			
Circular No.		**Date**	**04.07.2018**
To	IV-Year students		
Subject	Solid Modeling (Level-2) using CATIA & NXCAD software		
Circular issued by	Center of Excellence – CRCPDT & Designers Club, Department of Mechanical Engineering.		

This is to inform you that Center of Excellence – Composite Research Centre for Product Design, Digital Manufacturing and Technical Documentation (CRCPDT) & Designers Club has planned to conduct Solid Modeling (Level-2) using CATIA & NXCAD software for IV and III year students. Registered students are requested to attend the program as per the given schedule.

SL. NO.	NAME OF THE PROGRAM	VENUE DATE & TIME	RESOURCE PERSON
1	Solid Modeling (Level-2) using CATIA & NXCAD software	COE – CRCPDT, A-Block, KIOT. Advanced: 16.7.2018 to 28.07.2018	Mr.S.Santhosh Mr.K.V.Rangasamy AP, Mecahanical Engg. KIOT

For Further Details Kindly Contact: Mr.J.Prakash, AP/Mech, Faculty Incharge, COE-CRCPDT. M:+91 9789565007

J.Prakash		
SENDER		PRINCIPAL

MECH	VP Office	CIVIL	EEE	ECE	CSE	S&H	PD	LIB	EMS	AO	Trans-port I/C	Hostel NB	Director / Training	Director / Placement	Residential Warden		College NB	Office / File	Class Circula-tion	Security Office	KBS	Recep tion
															LH	GH						
•	•	•	•	•	•								•	•				•				

Checked by Principal office I/C		Verified by the sender	

File :

1) Principal Office :
2) Concerned issuing department :

PRINCIPAL
Knowledge Institute of Technology
Kakapalayam (PO) Salem - 637 504

Certificate Course
on
Solid Modeling (Level-2)
using CATIA software

16.07.2018 to 28.07.2018

Organized by

Department of Mechanical Engineering

KNOWLEDGE
INSTITUTE OF TECHNOLOGY

(Accredited by NAAC)

KIOT campus, Kakapalayam (PO), Salem-637 504,
Tamil Nadu, India.
www.kiot.ac.in

in association with

DASSAULT SYSTEMES

Harita TECHSERV

PRINCIPAL,
Knowledge Institute of Technology
Kakapalayam (PO) Salem - 637 504

About KIOT

KIOT is one of the best engineering institutes in Salem. It is approved by AICTE. New Delhi, affiliated to Anna University, Chennai and offers 5 UG Programs (Mech., Civil, EEE, ECE and CSE), 4 PG Programs (ISE, CSE, EST and VLSI Design) and 2 Ph.D. programs (Mech. and IC Engg.). KIOT is accredited by NAAC In the single window counselling (TNEA 2018) seats of KIOT were filled in 62nd position among more than 500 self-financing engineering colleges. KIOT is known for its placement of students in well reputed organisations. KIOT has been rated one among the top 3 institutions across India in AICTE-CII Survey of Industry Linked Technical institutions-2016 under the category of emerging engineering colleges. KIOT was recognised nationally by ISTE in awarding Best Engineering College Principal Award to Dr.PSS.Srinivasan, Principal, KIOT. The college has 17 industry linked labs, Research Centres and COEs. KIOT faculty have published 200+ papers in conference and 250+ Research Papers in reputed journals in the last 3 years. We also offer MBA programme at Knowledge Business School, Salem (KBSS), a sister institution of KIOT.

About the Department

Vision: To create competent and industry relevant Mechanical Engineers with professional and social values to meet global challenges.

Mission:

- Enabling environment for effective teaching - learning and research to meet global challenges.
- Motivating students to pursue higher education and to excel in competitive examinations and entrepreneurship.
- Establish a continuous Industry Institute Interaction to make the students employable.
- Inculcate the students leadership quality with ethical values and spirit of team work.

Mechanical Engineering program, accredited by NBA, is one of the vibrant departments of KIOT and offers B.E Mechanical Engineering, M.E Industrial Safety Engineering & Ph.D. programmes. The Department was awarded with platinum ranking in AICTE-CII Survey of Industry Linked Technical Institutions-2016. Dr.K.Visagavel, The Department has a team of dedicated faculty members with 5 Ph.D. The Department has established industrial collaborative research centres with Harita Techserv Pvt. Ltd. and IAPMO (International Association of Plumbing and Mechanical Officials).

SYLLABUS

1.Introduction to CATIA V5

Introduction About CATIA V5, History of CATIA, CATIA modeling process, Parametric design concept, feature based design. About PLM, CATIA Features, SKETCHER, Creating the new part.

2.SKETCHER WORKBENCH

Basic sketch, Sketch in task environment, Selection tools, Profile, Predefined shapes, Circles, Spline, Conics, Line, Points,

Operations, Corner, Chamfer, Projections, Transformations.

Constrains, Constrain dialogue box, Constrains, Fix together, Animate constrain, Edit multi constrain, Sketch tools, Grid, Snap on grid, Construction. Geometrical constrains, Dimensional constrains.. Sketch analysis Visualization tools, View tool bar, Workbench.

3.PART MODELING

Sketch based features Pad, Multipad, Drafted filleted pad. Pocket, Multipocket, Drafted filleted pocket Shafts, groove Holes Rib, Slots Solid combine, Stiffner.

Multi section solid, Multi section solid removal Edit Geometry, Parent child relationship, copy & paste features, Dress up features -Edge fillet, Variable radius fillet, Face to face fillet, Tri tangent fillet Chamfer Drafts.

Drafted reflected line, Variable angle draft Shell feature, Thicken Thread, Remove face, Replace face Transformation Features-Translation, Rotation, Symmetry, Axis to axis Mirror, Pattern-Rectangular.

Circular, User defined Design table, Power copy, Functions and relations, Catalog Scaling-Scale, Affinity Reference elements- Point, Axis, Planes, Boolean operations- Assemble, Add, Remove, Intersect, Union trim.

4. ASSEMBLY DESIGN

Introduction on assembly Assembly approaches-Top down assembly, Bottom up assembly Product structure tools Component, Product, Part Existing component, Existing component with positioning Replace component.

Graph tree reordering, Generate numbering Fast multi installation, Define multi installation Move options Manipulations Snap, Smart move Explode Stop manipulation on clash Assembly constrains Coincident, Contact constrain, Offset.

Angular, parallel, Perpendicular, Fix together, Quick constrain, Change constrain, Reuse pattern Assembly Features Split, Hole, Pocket, Add, Remove Symmetry in assembly.

5. DRAFTING AND DETAILING

Introduction on drafting Standards, Templates in drafting Creating the drawing Views Front view, Unfolded view, Projections, Auxiliary view, Isometric view, Advanced front view Sections Detail view, Clipping view, Broken view, View creation wizard Dimensions Dimensions, Chained dimensions, Cumulated dimensions

Stacked dimensions, Distance, Angular, Radius, Diameter, Chamfer dimensions, Thread dimensions, Coordinate dimensions, Hole dimension table and coordinate dimension table Dimension edition, Datum feature, Geometric tolerance Annotations Text, Text with leader, Balloon, Datum target, Text template replacement Symbols and Table creation Dress up Centre line. Area fill creations, Arrow Geometry creation Points, Lines, Circle and Ellipse, Profiles, Curves tools, Transformation tools, Constrains Generation Generate dimensions, Generate balloons, Bill of material generation Saving and Formats.

6. GENERATIVE SHEET METAL DESIGN

Introduction about sheet metal design Sheet metal parameters Walls-Wall, wall on edge, Extrusion Flange, Hem, Tear drop, User flange Recognize tool Rolled wall Hopper.

Free form surface, Rolled wall Bending Bend, Conical bend Bend from flat, Folding, Unfolding Point or curve mapping Cutting and stamping Pocket.

Hole, Circular cutout, corner relief, Fillet, Chamfer.

7. GENERATIVE SHAPE DESIGN

Wireframe Points, Points and plane repetition, Extemum and Extemum polar Line, Axis, Polyline Planes Projection.

Combine, Reflect line, Silhouette Parallel curve, Rolling offset, 3D offset Circle, and Corner. Connect curve, Conic Spline, Helix, Spiral, Curve from plane, Contour, Revolve, Sphere, Cylinder

Isoparametric curve Surfaces Extrude, Offset surfaces Sweeps and adaptive sweep Fill surfaces, Multisection surface, Blend surface Operations Join Split and Trim Extracts Shape fillets Chamfer Translate Extrapolate BIW templates Advance surfacing.

For Registration Kindly Contact:

Mr.J.Prakash, AP/Mech,

Faculty Incharge,COE-CRCPDT.

M:+91 9789565007, Mail:jpmech@kiot.ac.in

PRINCIPAL,
Knowledge Institute of Technology
Kakapalayam (PO) Salem - 637 504

KNOWLEDGE INSTITUTE OF TECHNOLOGY Department of Mechanical Engineering Course Plan			
Name of the COE	Composite Research Centre for Product Design, Digital Manufacturing and Technical Documentation (CRCPDT)		
Name of the Course	CATIA V5		
Solid Modeling (Level-1) using CATIA software	04	Number of Hours	32 hours
Solid Modeling (Level-1) using CATIA software	03	Number of Hours	32 hours

EXECUTION SCHEDULE

Module No.	Name of the Module	No. of Hours
1	Introduction to CATIA V5	02
2	Sketcher Workbench	06
3	Part Modeling	12
4	Assembly Design	12
5	Drafting and Detailing	08
6	Generative Sheet metal Design	12
7	Generative Shape Design	12

PRINCIPAL,
Knowledge Institute of Technology
Kakapalayam (PO) Salem - 637 504

Detailed Execution Plan

Name of the Course Module: 1.Introduction to CATIA V5

Duration: 02 hours

Module No.	Name of the Module	Teaching Hours	Practical Hours	Self-Study Hours	Course Plan (Day wise)
1	Introduction About CATIA V5, History of CATIA, CATIA modeling process, Parametric design concept, feature based design. About PLM, CATIA Features, SKETCHER, Creating the new part.	1	1	-	Day 1

Detailed Execution Plan

Name of the Course Module: 2.SKETCHER WORKBENCH

Duration: 06

Module No.	Name of the Module	Teaching Hours	Practical Hours	Self-Study Hours	Course Plan (Day wise)
2.1	Basic sketch, Sketch in task environment, Selection tools, Profile, Predefined shapes, Circles, Spline, Conics, Line, Points, Operations, Corner, Chamfer, Projections, Transformations.	1	2	-	Day 2
2.2	Constrains, Constrain dialogue box, Constrains, Fix together, Animate constrain, Edit multi constrain, Sketch tools, Grid, Snap on grid, Construction. Geometrical constrains, Dimensional constrains., Sketch analysis Visualization tools, View tool bar, Workbench.	1	2	-	Day 3

PRINCIPAL,
Knowledge Institute of Technology
Kakapalayam (PO) Salem - 637

Detailed Execution Plan

Name of the Course Module: 3.PART MODELING

Duration: 12

Module No.	Name of the Module	Teaching Hours	Practical Hours	Self-Study Hours	Course Plan (Day wise)
3.1	Sketch based features Pad, Multipad, Drafted filleted pad. Pocket, Multipocket, Drafted filleted pocket Shafts, groove Holes Rib, Slots Solid combine, Stiffner.	1	2	-	Day 4
3.2	Multi section solid, Multi section solid removal Edit Geometry, Parent child relationship, copy & paste features, Dress up features -Edge fillet, Variable radius fillet, Face to face fillet, Tri tangent fillet Chamfer Drafts.	1	2		Day 5
3.3	Drafted reflected line, Variable angle draft Shell feature, Thicken Thread, Remove face, Replace face Transformation Features- Translation, Rotation, Symmetry, Axis to axis Mirror, Pattern- Rectangular.	1	2	-	Day 6
3.4	Circular, User defined Design table, Power copy, Functions and relations, Catalog Scaling- Scale, Affinity Reference elements- Point, Axis, Planes, Boolean operations- Assemble, Add, Remove, Intersect, Union trim.	1	2	-	Day 7

PRINCIPAL.
Knowledge Institute of Technology
Kakapalayam (PO) Salem - 637 504

Detailed Execution Plan

Name of the Course Module: 4. Assembly Design

Duration: 12

Module No.	Name of the Module	Teaching Hours	Practical Hours	Self-Study Hours	Course Plan (Day wise)
4.1	Introduction on assembly Assembly approaches-Top down assembly, Bottom up assembly Product structure tools Component, Product, Part Existing component, Existing component with positioning Replace component.	1	2	-	Day 8
4.2	Graph tree reordering, Generate numbering Fast multi installation, Define multi installation Move options Manipulations Snap	1	2	-	Day 9
4.3	Smart move Explode Stop manipulation on clash Assembly constrains Coincident, Contact constrain, Offset. Angular, parallel, Perpendicular, Fix together, Quick constrain, Change constrain,	1	2	-	Day 10
4.4	Reuse pattern Assembly Features Split, Hole, Pocket, Add, Remove Symmetry in assembly.	1	2		Day 11

Detailed Execution Plan

Name of the Course Module: 5. Drafting and Detailing

Duration: 08

Module No.	Name of the Module	Teaching Hours	Practical Hours	Self-Study Hours	Course Plan (Day wise)
	Introduction on drafting Standards, Templates in drafting Creating the drawing Views Front view, Unfolded view, Projections, Auxiliary view, Isometric view,	1	1	-	Day 1

PRINCIPAL,
Knowledge Institute of Technology
Kakapalayam (PO) Salem - 637 504

5.1	Advanced front view Sections Detail view, Clipping view, Broken view, View creation wizard Dimensions Dimensions, Chained dimensions, Cumulated dimensions.				
5.2	Stacked dimensions, Distance, Angular, Radius, Diameter, Chamfer dimensions, Thread dimensions, Coordinate dimensions, Hole dimension table and coordinate dimension table Dimension edition, Datum feature	1	2	-	Day 2
5.3	Geometric tolerance Annotations Text, Text with leader, Balloon, Datum target, Text template replacement Symbols and Table creation Dress up Centre line. Area fill creations, Arrow Geometry creation Points, Lines, Circle and Ellipse, Profiles, Curves tools, Transformation tools, Constrains Generation Generate dimensions, Generate balloons, Bill of material generation Saving and Formats.	1	2	-	Day 3

Detailed Execution Plan

Name of the Course Module: 6. Generative Sheet metal Design

Duration: 12

Module No.	Name of the Module	Teaching Hours	Practical Hours	Self-Study Hours	Course Plan (Day wise)
6.1	Introduction about sheet metal design Sheet metal parameters Walls-Wall, wall on edge	1	2	-	Day 4
6.2	Extrusion Flange, Hem, Tear drop, User flange Recognize tool Rolled wall Hopper. Free form surface	1	2	-	Day 5

PRINCIPAL,
Knowledge Institute of Technology
Kakapalayam (PO) Salem - 637 504

6.3	Rolled wall Bending Bend, Conical bend Bend from flat, Folding, Unfolding Point	1	2	-	Day 6
6.4	Curve mapping Cutting and stamping Pocket Hole, Circular cutout, corner relief, Fillet, Chamfer.	1	2	-	Day 7

Detailed Execution Plan

Name of the Course Module: 7. Generative Shape Design

Duration: 12

Module No.	Name of the Module	Teaching Hours	Practical Hours	Self-Study Hours	Course Plan (Day wise)
7.1	Wireframe Points, Points and plane repetition, Extemum and Extemum polar Line, Axis, Polyline Planes Projection.	1	2	-	Day 8
7.2	Combine, Reflect line, Silhouette Parallel curve, Rolling offset, 3D offset Circle, and Corner. Connect curve, Conic Spline, Helix, Spiral, Curve from plane, Contour, Revolve, Sphere, Cylinder	1	2	-	Day 9
7.3	Isoparametric curve Surfaces Extrude, Offset surfaces Sweeps and adaptive sweep Fill surfaces, Multisection surface.	1	2	-	Day 10
7.4	Blend surface Operations Join Split and Trim Extracts Shape fillets Chamfer Translate Extrapolate BIW templates Advance surfacing.	1	2		Day 11

FACULTY I/c

HOD MECH

PRINCIPAL,
Knowledge Institute of Technology
Kakapalayam (PO) Salem - 637 504

KNOWLEDGE INSTITUTE OF TECHNOLOGY, SALEM-637504
DEPARTMENT OF MECHANICAL ENGINEERING
HARITA TECHSERV-CERTIFICATE COURSE
SOLID MODELING (LEVEL-2) USING CATIA SOFTWARE
NAME LIST

S.NO	SEC	REG. NO	NAME	YEAR	Remarks
1	B	611216114006	ANILGUPTHA C A	III/V	
2	D	611216114007	ARUN T	III/V	
3	C	611216114008	ATHISWARAN SM	III/V	
4	A	611216114010	BHARATH N	III/V	
5	A	611216114014	CHENNAKRISHNAN C	III/V	
6	D	611216114017	DHARANI DHARAN S	III/V	
7	D	611216114019	DHINESH KUMAR T	III/V	
8	B	611216114025	DINESH C	III/V	
9	C	611216114027	DINESH M (21-01-1999)	III/V	
10	A	611216114029	DIVAAHARAN V	III/V	
11	D	611216114031	DOMINIC SAVIO A	III/V	
12	C	611216114032	ELANGKUMARAN S	III/V	
13	B	611216114033	ELANGO S	III/V	
14	A	611216114034	GIRITHARAN A	III/V	
15	C	611216114035	GNANASURIYA RAJAN S	III/V	
16	D	611216114036	GOKUL S	III/V	
17	A	611216114037	GOKUL T	III/V	
18	D	611216114039	GOKULPRASANTH M	III/V	
19	C	611216114041	GOKULRAJAN A J	III/V	
20	A	611216114044	GOWTHAM R	III/V	
21	A	611216114045	GOWTHAM S	III/V	
22	A	611216114046	GOWTHAMRAJ V S	III/V	
23	C	611216114047	GUNAPRASANTH B	III/V	
24	D	611216114048	HAMANTHRAJ K	III/V	
25	B	611216114056	KARTHI B	III/V	
26	B	611216114059	KARTHICK V	III/V	
27	D	611216114071	LOGESH C	III/V	
28	D	611216114073	MANIKANDAN E	III/V	
29	C	611216114077	MOHANKUMAR L	III/V	
30	C	611216114082	NANDHAKUMAR S	III/V	
31	A	611216114083	NANDHAKUMAR V	III/V	
32	B	611216114084	NANTHAKUMAR D	III/V	
33	B	611216114085	NARENDIRAN S	III/V	
34	D	611216114086	NARESH KUMAR R	III/V	

PRINCIPAL,
Knowledge Institute of Technology
Kakapalayam (PO) Salem - 637 504

35	B	611216114090	NAVEENKUMAR L	III/V	
36	D	611216114096	NIRMAL GANESH C	III/V	
37	C	611216114104	PRAKASH S	III/V	
38	D	611216114110	PRAVEEN K M	III/V	
39	B	611216114112	PRAVEEN S (24-11-1998)	III/V	
40	B	611216114117	RAGUL S	III/V	
41	C	611216114123	RAVIBHARATHI P	III/V	
42	B	611216114125	RISHIKARAN S	III/V	
43	C	611216114127	SADHEESH KUMAR N	III/V	
44	C	611216114130	SANTHOSH V	III/V	
45	C	611216114134	SATHEES KUMAR N	III/V	
46	B	611216114139	SHANKAR M	III/V	
47	C	611216114149	SUBASH M	III/V	
48	B	611216114151	SUDHARSHAN V	III/V	
49	C	611216114156	TAMILARASAN R	III/V	
50	C	611216114160	THARUN P	III/V	
51	D	611216114162	VIGNESH M	III/V	
52	B	611216114303	ARUNKUMAR K	III/V	
53	B	611216114304	ARUNKUMAR K	III/V	
54	C	611216114318	GOWTHAM R	III/V	
55	A	611216114327	LOGESH T	III/V	
56	C	611216114332	NANDHA KUMAR M	III/V	
57	C	611216114339	PREM G	III/V	
58	D	611216114349	SUBASH U	III/V	
59	B	611216114352	SURIYAPRAKASH M	III/V	
60	A	611216114701	PREMKUMAR S	III/V	

FACULTY INCHARGE

HOD

PRINCIPAL
Knowledge Institute of Technology
Kanjalavam (PO) Salem - 637 504

KNOWLEDGE INSTITUTE OF TECHNOLOGY, SALEM-637504
DEPARTMENT OF MECHANICAL ENGINEERING
HARITA TECHSERV-CERTIFICATE COURSE
SOLID MODELING (LEVEL-2) USING CATIA SOFTWARE
TRAINING ATTENDANCE SHEET (16.07.2018 to 28.07.2018)

S.NO	SEC	REG. NO	NAME	YEAR	24.07.2018	25.07.2018	26.07.2018	27.07.2018	28.07.2018
1	B	611216114006	ANILGUPTHA C A	III/V					
2	D	611216114007	ARUN T	III/V					
3	C	611216114008	ATHISWARAN SM	III/V					
4	A	611216114010	BHARATH N	III/V					
5	A	611216114014	CHENNAKRISHNAN C	III/V					
6	D	611216114017	DHARANI DHARAN S	III/V					
7	D	611216114019	DHINESH KUMAR T	III/V		a			
8	B	611216114025	DINESH C	III/V					
9	C	611216114027	DINESH M (21-01-1999)	III/V					
10	A	611216114029	DIVAAHARAN V	III/V					
11	D	611216114031	DOMINIC SAVIO A	III/V					
12	C	611216114032	ELANGKUMARAN S	III/V					
13	B	611216114033	ELANGO S	III/V					
14	A	611216114034	GIRITHARAN A	III/V					
15	C	611216114035	GNANASURIYA RAJAN S	III/V					
16	D	611216114036	GOKUL S	III/V			a		
17	A	611216114037	GOKUL T	III/V			a		
18	D	611216114039	GOKULPRASANTH M	III/V					
19	C	611216114041	GOKULRAJAN A J	III/V					
20	A	611216114044	GOWTHAM R	III/V					
21	A	611216114045	GOWTHAM S	III/V					
22	A	611216114046	GOWTHAMRAJ V S	III/V					
23	C	611216114047	GUNAPRASANTH B	III/V					
24	D	611216114048	HAMANTHRAJ K	III/V					
25	B	611216114056	KARTHI B	III/V					
26	B	611216114059	KARTHICK V	III/V					
27	D	611216114071	LOGESH C	III/V					
28	D	611216114073	MANIKANDAN E	III/V					
29	C	611216114077	MOHANKUMAR L	III/V					
30	C	611216114082	NANDHAKUMAR S	III/V					
31	A	611216114083	NANDHAKUMAR V	III/V					
32	B	611216114084	NANTHAKUMAR D	III/V					
33	B	611216114085	NARENDIRAN S	III/V					
34	D	611216114086	NARESH KUMAR R	III/V					
35	B	611216114090	NAVEENKUMAR L	III/V					
36	D	611216114096	NIRMAL GANESH C	III/V					
37	C	611216114104	PRAKASH S	III/V					
38	D	611216114110	PRAVEEN K M	III/V					
39	B	611216114112	PRAVEEN S (24-11-1998)	III/V					
40	B	611216114117	RAGUL S	III/V					
41	C	611216114123	RAVIBHARATHI P	III/V					
42	B	611216114125	RISHIKARAN S	III/V					
43	C	611216114127	SADHEESH KUMAR N	III/V					

PRINCIPAL,
Knowledge Institute of Technology
Kakapalayam (PO) Salem - 637 504

44	C	611216114130	SANTHOSH V	III/V	/	/	/	/	/
45	C	611216114134	SATHEES KUMAR N	III/V	/	/	/	/	/
46	B	611216114139	SHANKAR M	III/V	/	/	/	/	/
47	C	611216114149	SUBASH M	III/V	/	/	/	/	/
48	B	611216114151	SUDHARSHAN V	III/V	/	/	/	/	/
49	C	611216114156	TAMILARASAN R	III/V	/	/	/	/	/
50	C	611216114160	THARUN P	III/V	/	/	/	/	/
51	D	611216114162	VIGNESH M	III/V	/	/	/	/	/
52	B	611216114303	ARUNKUMAR K	III/V	/	/	/	/	/
53	B	611216114304	ARUNKUMAR K	III/V	/	/	/	/	/
54	C	611216114318	GOWTHAM R	III/V	/	/	/	/	/
55	A	611216114327	LOGESH T	III/V	/	/	/	/	/
56	C	611216114332	NANDHA KUMAR M	III/V	/	/	/	/	/
57	C	611216114339	PREM G	III/V	/	/	/	/	/
58	D	611216114349	SUBASH U	III/V	/	/	/	/	/
59	B	611216114352	SURIYAPRAKASH M	III/V	/	/	/	/	/
60	A	611216114701	PREMKUMAR S	III/V	/	/	/	/	/
No. of Students Present					60	59	58	60	60
No. of Students Absent					-	1	2	-	-
Faculty Signature					27/12	27/12	27/12	27/12	27/12

28/12/18

FACULTY INCHARGE

HOD MECHANICAL

PRINCIPAL
Knowledge Institute of Technology
Kadayampatti (PO) Salem - 637 5

KNOWLEDGE INSTITUTE OF TECHNOLOGY, SALEM-637504
DEPARTMENT OF MECHANICAL ENGINEERING
HARITA TECHSERV-CERTIFICATE COURSE
SOLID MODELING (LEVEL-2) USING CATIA SOFTWARE
TRAINING ATTENDANCE SHEET (16.07.2018 to 28.07.2018)

S.NO	SEC	REG. NO	NAME	YEAR	16.07.2018	17.07.2018	18.07.2018	19.07.2018	20.07.2018	23.07.2018
1	B	611216114006	ANILGUPTHA C A	III/V	/	/	/	/	/	/
2	D	611216114007	ARUN T	III/V	/	/	/	/	/	/
3	C	611216114008	ATHISWARAN SM	III/V	/	/	/	/	/	/
4	A	611216114010	BHARATH N	III/V	/	/	/	/	/	/
5	A	611216114014	CHENNAKRISHNAN C	III/V	/	/	/	/	/	/
6	D	611216114017	DHARANI DHARAN S	III/V	/	/	/	/	/	/
7	D	611216114019	DHINESH KUMAR T	III/V	/	/	/	/	/	/
8	B	611216114025	DINESH C	III/V	/	/	/	/	/	/
9	C	611216114027	DINESH M (21-01-1999)	III/V	/	/	/	/	/	/
10	A	611216114029	DIVAAHARAN V	III/V	/	/	/	/	/	/
11	D	611216114031	DOMINIC SAVIO A	III/V	/	/	/	/	/	/
12	C	611216114032	ELANGKUMARAN S	III/V	/	/	/	/	/	/
13	B	611216114033	ELANGO S	III/V	/	/	/	/	/	/
14	A	611216114034	GIRITHARAN A	III/V	/	/	/	/	/	/
15	C	611216114035	GNANASURIYA RAJAN S	III/V	/	/	/	/	/	/
16	D	611216114036	GOKUL S	III/V	/	/	/	/	/	/
17	A	611216114037	GOKUL T	III/V	/	/	/	/	/	/
18	D	611216114039	GOKULPRASANTH M	III/V	/	/	/	/	/	/
19	C	611216114041	GOKULRAJAN A J	III/V	/	/	/	/	/	/
20	A	611216114044	GOWTHAM R	III/V	/	/	/	/	/	/
21	A	611216114045	GOWTHAM S	III/V	/	/	/	/	/	/
22	A	611216114046	GOWTHAMRAJ V S	III/V	/	/	/	/	/	/
23	C	611216114047	GUNAPRASANTH B	III/V	/	/	/	/	/	/
24	D	611216114048	HAMANTHRAJ K	III/V	/	/	/	/	/	/
25	B	611216114056	KARTHI B	III/V	/	/	/	/	/	/
26	B	611216114059	KARTHICK V	III/V	/	/	/	/	/	/
27	D	611216114071	LOGESH C	III/V	/	/	/	/	/	/
28	D	611216114073	MANIKANDAN E	III/V	/	/	/	/	/	/
29	C	611216114077	MOHANKUMAR L	III/V	/	/	/	/	/	/
30	C	611216114082	NANDHAKUMAR S	III/V	/	/	/	/	/	/
31	A	611216114083	NANDHAKUMAR V	III/V	/	/	/	/	/	/
32	B	611216114084	NANTHAKUMAR D	III/V	/	/	/	/	/	/
33	B	611216114085	NARENDIRAN S	III/V	/	/	/	/	/	/
34	D	611216114086	NARESH KUMAR R	III/V	/	/	/	/	/	/
35	B	611216114090	NAVEENKUMAR L	III/V	/	/	/	/	/	/
36	D	611216114096	NIRMAL GANESH C	III/V	/	/	/	/	/	/
37	C	611216114104	PRAKASH S	III/V	/	/	/	/	/	/
38	D	611216114110	PRAVEEN K M	III/V	/	/	/	/	/	/
39	B	611216114112	PRAVEEN S (24-11-1998)	III/V	/	/	/	/	/	/
40	B	611216114117	RAGUL S	III/V	/	/	/	/	/	/
41	C	611216114123	RAVIBHARATHI P	III/V	/	/	/	/	/	/
42	B	611216114125	RISHIKARAN S	III/V	/	/	/	/	/	/
43	C	611216114127	SADHEESH KUMAR N	III/V	/	/	/	/	/	/
44	C	611216114130	SANTHOSH V	III/V	/	/	/	/	/	/
45	C	611216114134	SATHEES KUMAR N	III/V	/	/	/	/	/	/

PRINCIPAL,
Knowledge Institute of Technology
Kakapalayam (PO), Salem - 637 504

46	B	611216114139	SHANKAR M	III/V	/	/	/	/	/	/
47	C	611216114149	SUBASH M	III/V	/	/	/	/	/	/
48	B	611216114151	SUDHARSHAN V	III/V	/	/	/	/	/	/
49	C	611216114156	TAMILARASAN R	III/V	/	/	/	/	/	/
50	C	611216114160	THARUN P	III/V	/	/	/	/	/	/
51	D	611216114162	VIGNESH M	III/V	/	/	/	/	/	/
52	B	611216114303	ARUNKUMAR K	III/V	/	/	/	/	/	/
53	B	611216114304	ARUNKUMAR K	III/V	/	/	/	/	/	/
54	C	611216114318	GOWTHAM R	III/V	/	/	/	/	/	/
55	A	611216114327	LOGESH T	III/V	/	/	/	/	/	/
56	C	611216114332	NANDHA KUMAR M	III/V	/	/	/	/	/	/
57	C	611216114339	PREM G	III/V	/	/	/	/	/	/
58	D	611216114349	SUBASH U	III/V	/	/	/	/	/	/
59	B	611216114352	SURIYAPRAKASH M	III/V	/	/	/	/	/	/
60	A	611216114701	PREMKUMAR S	III/V	/	/	/	/	/	/
No. of Students Present					60	59	60	59	60	60
No. of Students Absent					-	1	-	1	-	-
Faculty Signature					16/7	17/7	18/7	19/7	20/7	25/7

FACULTY INCHARGE 23/7/18

HOD MECHANICAL

PRINCIPAL.
Knowledge Institute of Technology
Kanjapalayam (PO) Salem - 6

KNOWLEDGE INSTITUTE OF TECHNOLOGY, SALEM

Department Of Mechanical Engineering

EVALUATION FORM-CERTIFICATE COURSE

Solid Modeling (Level-2) using CATIA & NXCAD software

Name: C. A. Anil Gupthar	Reg. No: 611216114006	Year/Sem/Sec: III V

ASSESSMENT TEST

S.NO.	DESCRIPTION	MARKS ALLOTED	MARKS OBTAINED
1	PART-A (SKETCHER)	25	20
2	SURFACE DESIGN	50	35
3	DETAILING	25	20
	TOTAL MARKS	100	75

28/7/18

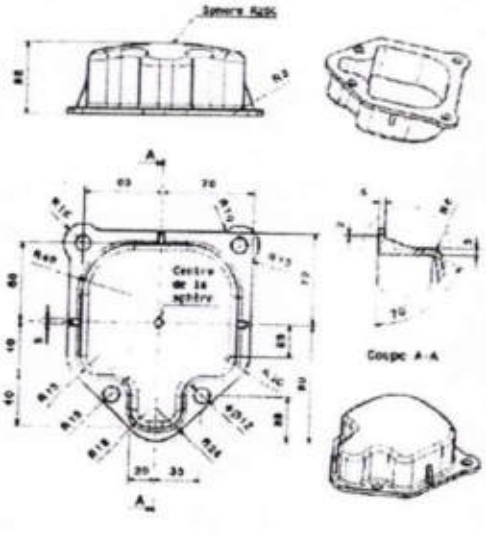

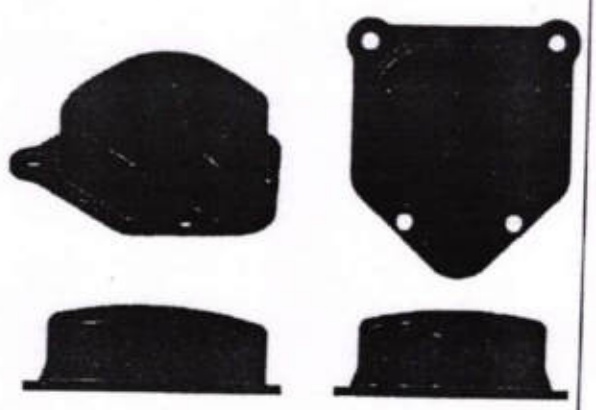

PRINCIPAL,
Knowledge Institute of Technology
Kakapalayam (PO), Salem - 6..

KNOWLEDGE INSTITUTE OF TECHNOLOGY, SALEM
Department Of Mechanical Engineering

EVALUATION FORM-CERTIFICATE COURSE
Solid Modeling (Level-2) using CATIA & NXCAD software

Name: Naveenkumar.C | Reg. No: 611216114090 | Year/Sem/Sec: III V

ASSESSMENT TEST

S.NO.	DESCRIPTION	MARKS ALLOTED	MARKS OBTAINED
1	PART-A (SKETCHER)	25	25
2	SURFACE DESIGN	50	50
3	DETAILING	25	20
TOTAL MARKS		100	95

26/7/19

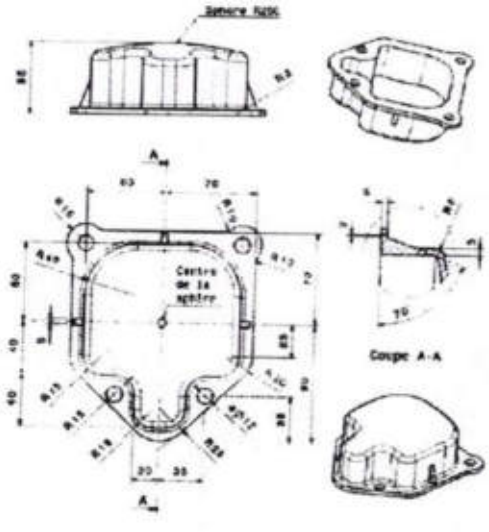

PRINCIPAL,
Knowledge Institute of Technology
Kakapalayam (PO) Salem - 637 504

KNOWLEDGE INSTITUTE OF TECHNOLOGY, SALEM

Department Of Mechanical Engineering

EVALUATION FORM-CERTIFICATE COURSE

Solid Modeling (Level-2) using CATIA & NXCAD software

Name: C. Nirand Ganesh	Reg. No: 6112/6114096	Year/Sem/Sec: III / V

ASSESSMENT TEST

S.NO.	DESCRIPTION	MARKS ALLOTED	MARKS OBTAINED
1	PART-A (SKETCHER)	25	20
2	SURFACE DESIGN	50	35
3	DETAILING	25	25
	TOTAL MARKS	100	80

28/7/18

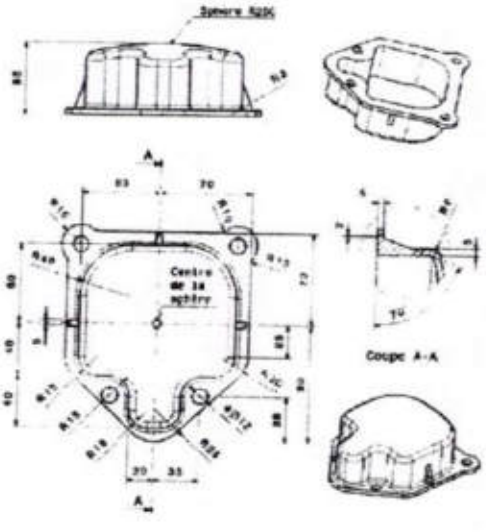

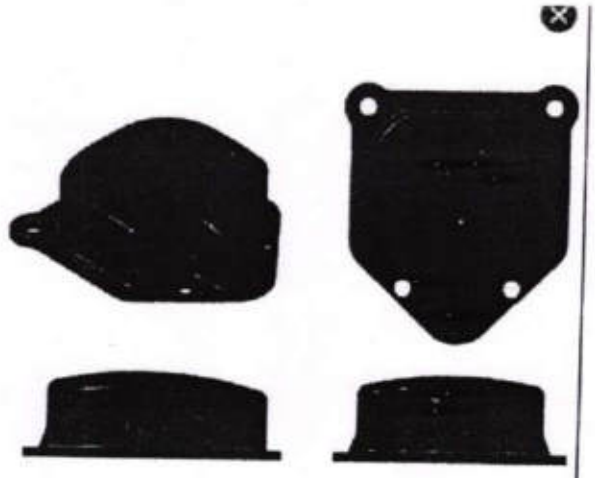

PRINCIPAL,
Knowledge Institute of Technology
Kakapalayam (PO) Salem - 637 504

KNOWLEDGE INSTITUTE OF TECHNOLOGY, SALEM
Department Of Mechanical Engineering

EVALUATION FORM-CERTIFICATE COURSE
Solid Modeling (Level-2) using CATIA & NXCAD software

Name: S. Prakash. | Reg. No: 6112611405104 | Year/Sem/Sec: III/VI

ASSESSMENT TEST

S.NO.	DESCRIPTION	MARKS ALLOTED	MARKS OBTAINED
1	PART-A (SKETCHER)	25	15
2	SURFACE DESIGN	50	35
3	DETAILING	25	15
TOTAL MARKS		100	65

28/2/18

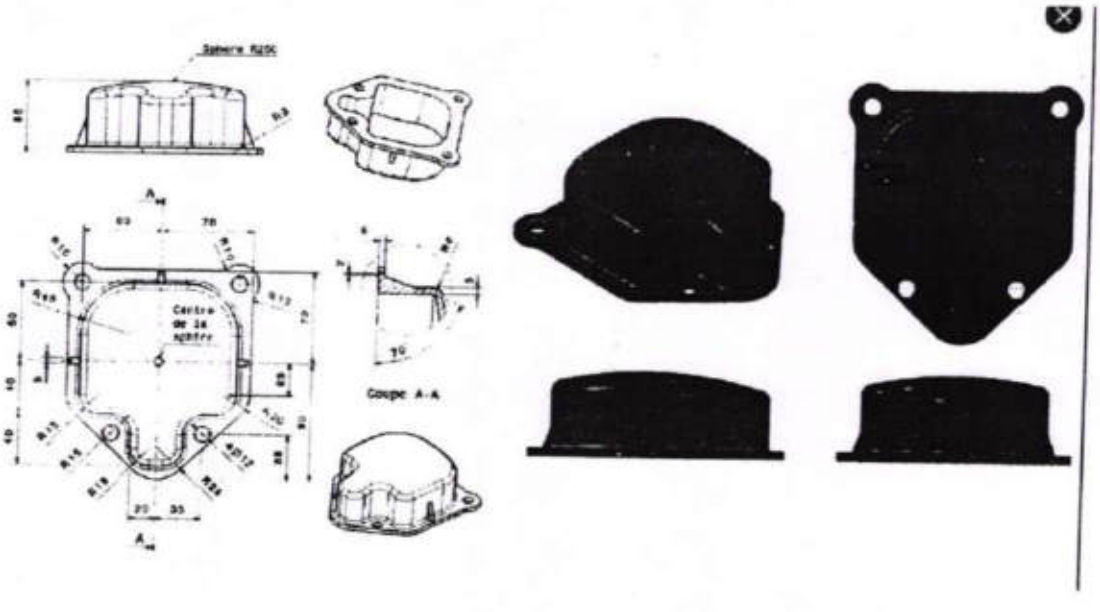

PRINCIPAL,
Knowledge Institute of Technology
Kakapalayam (PO) Salem - 637 504

KNOWLEDGE INSTITUTE OF TECHNOLOGY, SALEM
Department Of Mechanical Engineering

EVALUATION FORM-CERTIFICATE COURSE
Solid Modeling (Level-2) using CATIA & NXCAD software

Name: PRAVEEN.KM | Reg. No: 611216114110 | Year/Sem/Sec: III V

ASSESSMENT TEST

S.NO.	DESCRIPTION	MARKS ALLOTED	MARKS OBTAINED
1	PART-A (SKETCHER)	25	25
2	SURFACE DESIGN	50	45
3	DETAILING	25	20
TOTAL MARKS		100	90

6/2/17/18

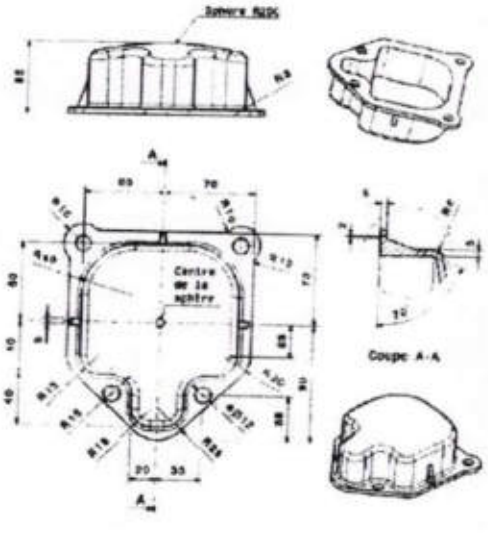

PRINCIPAL,
Knowledge Institute of Technology
Kakapalayam (PO) Salem - 637 504

KNOWLEDGE INSTITUTE OF TECHNOLOGY, SALEM-637504
DEPARTMENT OF MECHANICAL ENGINEERING
HARITA TECHSERV-CERTIFICATE COURSE
SOLID MODELING (LEVEL-2) USING CATIA SOFTWARE
EVALUATION MARKS

S.NO	SEC	REG. NO	NAME	YEAR	MARKS (100)
1	B	611216114006	ANILGUPTHA C A	III/V	75
2	D	611216114007	ARUN T	III/V	70
3	C	611216114008	ATHISWARAN SM	III/V	95
4	A	611216114010	BHARATH N	III/V	95
5	A	611216114014	CHENNAKRISHNAN C	III/V	90
6	D	611216114017	DHARANI DHARAN S	III/V	65
7	D	611216114019	DHINESH KUMAR T	III/V	70
8	B	611216114025	DINESH C	III/V	85
9	C	611216114027	DINESH M (21-01-1999)	III/V	95
10	A	611216114029	DIVAAHARAN V	III/V	55
11	D	611216114031	DOMINIC SAVIO A	III/V	75
12	C	611216114032	ELANGKUMARAN S	III/V	60
13	B	611216114033	ELANGO S	III/V	95
14	A	611216114034	GIRITHARAN A	III/V	90
15	C	611216114035	GNANASURIYA RAJAN S	III/V	80
16	D	611216114036	GOKUL S	III/V	85
17	A	611216114037	GOKUL T	III/V	65
18	D	611216114039	GOKULPRASANTH M	III/V	55
19	C	611216114041	GOKULRAJAN A J	III/V	50
20	A	611216114044	GOWTHAM R	III/V	75
21	A	611216114045	GOWTHAM S	III/V	95
22	A	611216114046	GOWTHAMRAJ V S	III/V	90
23	C	611216114047	GUNAPRASANTH B	III/V	90
24	D	611216114048	HAMANTHRAJ K	III/V	80
25	B	611216114056	KARTHI B	III/V	65
26	B	611216114059	KARTHICK V	III/V	85
27	D	611216114071	LOGESH C	III/V	90
28	D	611216114073	MANIKANDAN E	III/V	95
29	C	611216114077	MOHANKUMAR L	III/V	75
30	C	611216114082	NANDHAKUMAR S	III/V	70
31	A	611216114083	NANDHAKUMAR V	III/V	65
32	B	611216114084	NANTHAKUMAR D	III/V	70
33	B	611216114085	NARENDIRAN S	III/V	80
34	D	611216114086	NARESH KUMAR R	III/V	85

PRINCIPAL,
Knowledge Institute of Technology
Kakapalayam (PO) Salem - 637 504

35	B	611216114090	NAVEENKUMAR L	III/V	95
36	D	611216114096	NIRMAL GANESH C	III/V	80
37	C	611216114104	PRAKASH S	III/V	65
38	D	611216114110	PRAVEEN K M	III/V	90
39	B	611216114112	PRAVEEN S (24-11-1998)	III/V	65
40	B	611216114117	RAGUL S	III/V	60
41	C	611216114123	RAVIBHARATHI P	III/V	55
42	B	611216114125	RISHIKARAN S	III/V	95
43	C	611216114127	SADHEESH KUMAR N	III/V	90
44	C	611216114130	SANTHOSH V	III/V	90
45	C	611216114134	SATHEES KUMAR N	III/V	90
46	B	611216114139	SHANKAR M	III/V	65
47	C	611216114149	SUBASH M	III/V	70
48	B	611216114151	SUDHARSHAN V	III/V	70
49	C	611216114156	TAMILARASAN R	III/V	85
50	C	611216114160	THARUN P	III/V	90
51	D	611216114162	VIGNESH M	III/V	95
52	B	611216114303	ARUNKUMAR K	III/V	80
53	B	611216114304	ARUNKUMAR K	III/V	85
54	C	611216114318	GOWTHAM R	III/V	65
55	A	611216114327	LOGESH T	III/V	60
56	C	611216114332	NANDHA KUMAR M	III/V	70
57	C	611216114339	PREM G	III/V	95
58	D	611216114349	SUBASH U	III/V	95
59	B	611216114352	SURIYAPRAKASH M	III/V	80
60	A	611216114701	PREMKUMAR S	III/V	65

28/7/18

FACULTY INCHARGE

HOD

PRINCIPAL
Knowledge Institute of Technology
Kakapalayam (PO) Salem - 637 504

KNOWLEDGE INSTITUTE OF TECHNOLOGY
Accredited by NAAC

HARITA TECHSERV LIMITED

Certificate of Completion

This certificate is awarded to

DIVAAHARAN.V (611216114029)

In recognition of sucessful completion of

"Solid Modeling (Level-2) using CATIA software"

PRINCIPAL,
Knowledge Institute of Technology
Kakapalayam (PO) Salem - 637 504

Conducted by "CRCPDT-Harita Techserv Limited" from 16.07.2018 to 28.07.2018
Department of Mechanical Engineering, Knowledge Institute of Technology salem, Tamilnadu, India

Mr.M.Sathyanathan	Dr.K.Visagavel	Dr.PSS.Srinivasan	R.Shankarnarayanan
Coordinator	HOD/Mechanical	Principal	COO/Harita Techserv Limited

KNOWLEDGE INSTITUTE OF TECHNOLOGY
Accredited by NAAC

HARITA TECHSERV LIMITED

Certificate of Completion

This certificate is awarded to

KARTHI.B (611216114056)

In recognition of sucessful completion of

"Solid Modeling (Level-2) using CATIA software"

PRINCIPAL,
Knowledge Institute of Technology
Kakapalayam (PO) Salem - 637 504

Conducted by "CRCPDT-Harita Techserv Limited" from 16.07.2018 to 28.07.2018
Department of Mechanical Engineering, Knowledge Institute of Technology salem, Tamilnadu, India

Mr.M.Sathyanathan	Dr.K.Visagavel	Dr.PSS.Srinivasan	R.Shankarnarayanan
Coordinator	HOD/Mechanical	Principal	COO/Harita Techserv Limited

KNOWLEDGE INSTITUTE OF TECHNOLOGY
Accredited by NAAC

HARITA TECHSERV LIMITED

Certificate of Completion

This certificate is awarded to

LOGESH.C (611216114071)

In recognition of sucessful completion of

"Solid Modeling (Level-2) using CATIA software"

PRINCIPAL,
Knowledge Institute of Technology
Kakapalayam (PO), Salem

Conducted by "CRCPDT-Harita Techserv Limited" from 16.07.2018 to 28.07.2018
Department of Mechanical Engineering, Knowledge Institute of Technology salem, Tamilnadu, India

Mr.M.Sathyanathan	Dr.K.Visagavel	Dr.PSS.Srinivasan	R.Shankarnarayanan
Coordinator	HOD/Mechanical	Principal	COO/Harita Techserv Limited

KNOWLEDGE INSTITUTE OF TECHNOLOGY
Accredited by NAAC

HARITA TECHSERV LIMITED

Certificate of Completion

This certificate is awarded to

RAVIBHARATHI.P (611216114123)

In recognition of sucessful completion of

"Solid Modeling (Level-2) using CATIA software"

PRINCIPAL,
Knowledge Institute of Technology
Kakkapalayam (PO), Salem - 637 504

Conducted by "CRCPDT-Harita Techserv Limited" from 16.07.2018 to 28.07.2018
Department of Mechanical Engineering, Knowledge Institute of Technology salem, Tamilnadu, India

Mr.M.Sathyanathan	Dr.K.Visagavel	Dr.PSS.Srinivasan	R.Shankarnarayanan
Coordinator	HOD/Mechanical	Principal	COO/Harita Techserv Limited

KNOWLEDGE INSTITUTE OF TECHNOLOGY
Accredited by NAAC

HARITA TECHSERV LIMITED

Certificate of Completion

This certificate is awarded to

RISHIKARAN.S (611216114125)

In recognition of sucessful completion of

"Solid Modeling (Level-2) using CATIA software"

PRINCIPAL
Knowledge Institute of Technology
Kakapalayam (PO) Salem - 637 504

Conducted by "CRCPDT-Harita Techserv Limited" from 16.07.2018 to 28.07.2018
Department of Mechanical Engineering, Knowledge Institute of Technology salem, Tamilnadu, India

Mr.M.Sathyanathan	Dr.K.Visagavel	Dr.PSS.Srinivasan	R.Shankarnarayanan
Coordinator	HOD/Mechanical	Principal	COO/Harita Techserv Limited

KNOWLEDGE INSTITUTE OF TECHNOLOGY, SALEM
Department Of Mechanical Engineering

FEEDBACK FORM-CERTIFICATE COURSE

Solid Modeling (Level-2) using NXCAD/CATIA software

Name: S. NARENDIRAN Year/Sem/Sec: III V

S.No.	List of Content	Strongly Agree	Agree	Neutral	Disagree	Strongly Disagree
1	Drafting and Detailing		✓			
2	Generative Sheet metal Design		✓			
3	Generative Shape Design		✓			
4	Course content and Hands on Experience of CATIA V5		✓			
5	Trainer Explanation level about this course		✓			
6	Have you learned Shortcuts of the Tool and worked out Industry Drawings		✓			
7	Overall Experience about this course		✓			

Suggestion for Improvement

S. Narendiran.
Signature of the Candidate

PRINCIPAL,
Knowledge Institute of Technology
Kakapalayam (PO) Salem - 637 504

KNOWLEDGE INSTITUTE OF TECHNOLOGY, SALEM
Department Of Mechanical Engineering

FEEDBACK FORM-CERTIFICATE COURSE

Solid Modeling (Level-2) using NXCAD/CATIA software

Name: Santhosh. V

Year/Sem/Sec: III V

S.No.	List of Content	Strongly Agree	Agree	Neutral	Disagree	Strongly Disagree
1	Drafting and Detailing	✓				
2	Generative Sheet metal Design		✓			
3	Generative Shape Design	✓				
4	Course content and Hands on Experience of CATIA V5	✓				
5	Trainer Explanation level about this course		✓			
6	Have you learned Shortcuts of the Tool and worked out Industry Drawings		✓			
7	Overall Experience about this course		✓			

Suggestion for Improvement

V Santhosh
Signature of the Candidate

PRINCIPAL,
Knowledge Institute of Technology
Kakapalayam (PO) Salem - 637 504

KNOWLEDGE INSTITUTE OF TECHNOLOGY, SALEM
Department Of Mechanical Engineering

FEEDBACK FORM-CERTIFICATE COURSE
Solid Modeling (Level-2) using NXCAD/CATIA software

Name: M. Sankar. Year/Sem/Sec: III V

S.No.	List of Content	Strongly Agree	Agree	Neutral	Disagree	Strongly Disagree
1	Drafting and Detailing		✓			
2	Generative Sheet metal Design			✓		
3	Generative Shape Design		✓			
4	Course content and Hands on Experience of CATIA V5			✓		
5	Trainer Explanation level about this course		✓	✓		
6	Have you learned Shortcuts of the Tool and worked out Industry Drawings	✓				
7	Overall Experience about this course	✓				

Suggestion for Improvement

M. Sankar
Signature of the Candidate

PRINCIPAL,
Knowledge Institute of Technology
Kakapalayam (PO) Salem - 637 504

KNOWLEDGE INSTITUTE OF TECHNOLOGY, SALEM
Department Of Mechanical Engineering

FEEDBACK FORM-CERTIFICATE COURSE

Solid Modeling (Level-2) using NXCAD/CATIA software

Name: P. tharun Year/Sem/Sec: III / V I

S.No.	List of Content	Strongly Agree	Agree	Neutral	Disagree	Strongly Disagree
1	Drafting and Detailing					
2	Generative Sheet metal Design					
3	Generative Shape Design					
4	Course content and Hands on Experience of CATIA V5					
5	Trainer Explanation level about this course					
6	Have you learned Shortcuts of the Tool and worked out Industry Drawings					
7	Overall Experience about this course					

Suggestion for Improvement

P. tharun.

Signature of the Candidate

PRINCIPAL
Knowledge Institute of Technology
Kakapalayam (PO) Salem - 637 504

KNOWLEDGE INSTITUTE OF TECHNOLOGY, SALEM
Department Of Mechanical Engineering

FEEDBACK FORM-CERTIFICATE COURSE

Solid Modeling (Level-2) using NXCAD/CATIA software

Name: SUBASH.D. Year/Sem/Sec: III V

S.No.	List of Content	Strongly Agree	Agree	Neutral	Disagree	Strongly Disagree
1	Drafting and Detailing	✓				
2	Generative Sheet metal Design	✓				
3	Generative Shape Design	✓				
4	Course content and Hands on Experience of CATIA V5	✓				
5	Trainer Explanation level about this course	✓				
6	Have you learned Shortcuts of the Tool and worked out Industry Drawings	✓				
7	Overall Experience about this course	✓				

Suggestion for Improvement

Subash.D.
Signature of the Candidate

PRINCIPAL,
Knowledge Institute of Technology
Kakkapalayam (PO) Salem - 637 504

KNOWLEDGE INSTITUTE OF TECHNOLOGY, SALEM-637504

DEPARTMENT OF MECHANICAL ENGINEERING

REPORT OF THE EVENT (Module:3)

Date	:	09.08.2018 to 31.08.2018	**Resource person**	:	**Mr.J.Ramesh** Assistant Professor, Department of Mechanical Engineering, Knowledge Institute of Technology
Time	:	05.00 pm to 07.00 pm & 30 Hours	**Title**	:	**Ducting Design for all air HVAC system**
Venue	:	A310, KIOT	**No. of Participants**	:	43

1. The Recourse persons are explained to the participants about project estimation, static pressure calculation and pressure control mechanism.
2. They explained about industry drawings to the students.

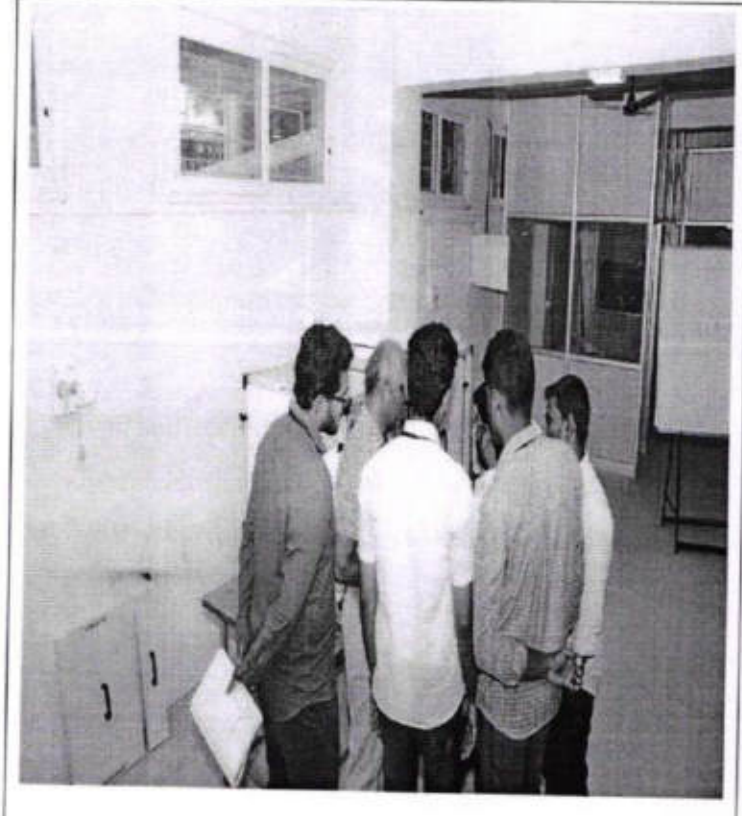

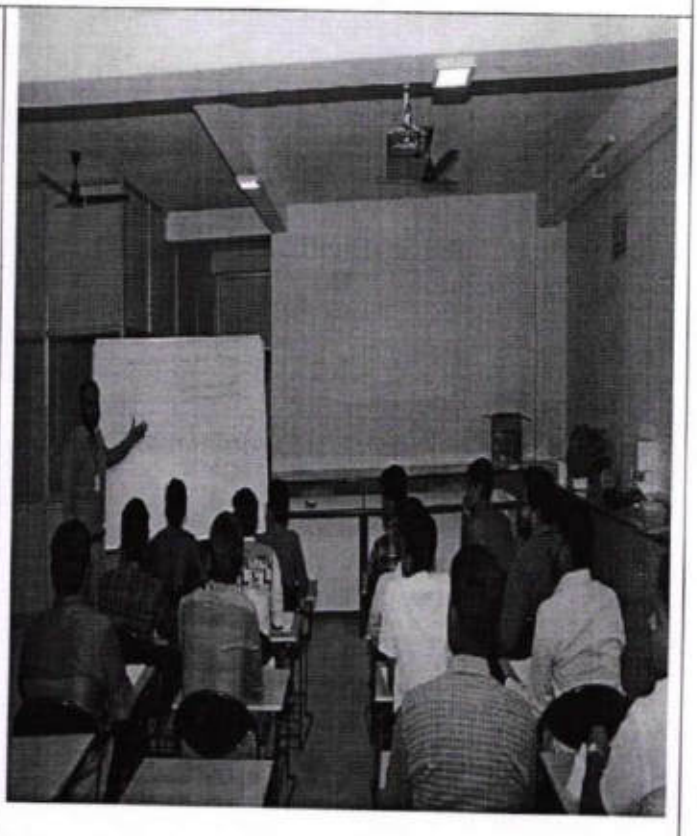

Encl: Circular / Brochure / Attendance Sheet

Principal,
Knowledge Institute of Technology
Kakapalayam (Po), Salem-637 504

KNOWLEDGE INSTITUTE OF TECHNOLOGY, SALEM - 637 504

CIRCULAR

Circular No.	KIOT/MECH/IAPMO/2018-19/01	**Date**	30.07.2018
To	All Faculty & Final year students of Mechanical Engineering		
Subject	**Ducting Design for all Air HVAC System** - IAPMO - Certification Course - Reg.		
Circular issued by	IIK (IAPMO-India-KIOT) center		

We have planned to conduct, HVAC Training on **Ducting Design for all Air HVAC System** from 09.08.2018 for Final year Mechanical Engineering students through IIK (IAPMO-India-KIOT) center in this Academic Year (2018-2019).

Venue: A302.

Time: 05.00pm to 07.00pm

Encl: Name list of shortlisted students.

SENDER		PRINCIPAL

MECH	VP Office	CIVIL	EEE	ECE	CSE	S&H	PD	LIB	EMS	AO	Transport I/C	Hostel NB	Director / Training	Director / Placement	Residential Warden		College NB	Office / File	Class Circulation	Security Office	KBS	Reception
															LH	GH						
*	*	*	*	*	*	*	*						*	*				*	*			

Checked by Principal office I/C		Verified by the sender	

File :

1) Principal Office :
2) Concerned issuing department :

Principal,
Knowledge Institute of Technology
Kakapalayam (Po), Salem-637 504

From

S.Surendar,
Assistant Professor,
Department of Mechanical Engineering,
Knowledge Institute of Technology,
Salem.

To

Permitted

The Principal,
Knowledge Institute of Technology,
Salem.

Through: Head of the Department, Department of Mechanical Engineering

Respected Sir,

Sub: Ducting Design for all Air HVAC System –regarding

We have planned to conduct, HVAC Training on **Ducting Design for all Air HVAC System** from 09.08.2018 for final year mechanical engineering students through IIK (IAPMO-India-KIOT) center in this Academic Year (2018-2019).In this regard, I request your permission to execute the certification course for final year Mechanical Engineering students.

Encl: Name list of shortlisted students.

Thanking You

Place: Salem

Date: 30.07.2018

Yours Faithfully

30/07/2018

S.Surendar AP/Mech

HOD/MECH

Principal,
Knowledge Institute of Technology,
Kakapalayam (Po), Salem-637 504

KNOWLEDGE INSTITUTE OF TECHNOLOGY, SALEM-637504

DEPARTMENT OF MECHANICAL ENGINEERING

CENTER FOR HEATING VENTILATION AND AIR CONDITIONING

BATCH- (2015-2019) AY: 2018-19

NAME LIST

Year/Sem: IV / VII

Date:30.07.2018

S.No.	Register Number	Student Name	Remarks
1.	611215114001	ABISHEK HUSSAIN J	
2.	611215114002	ABISHIEK B	
3.	611215114003	ADITHYA R	
4.	611215114004	ADITYA R	
5.	611215114011	ARULBALAJI S	
6.	611215114013	ARUNACHALAM K	
7.	611215114014	ARUNKUMAR P	
8.	611215114016	ASIK RAM K P	
9.	611215114027	CHANDRAPRAKASH K	
10.	611215114039	DINESH.P	
11.	611215114046	GOKUL S	
12.	611215114048	GOKULRAJ S	
13.	611215114050	GOPIKANNAN R	
14.	611215114051	GOVINDARAJ S	
15.	611215114079	KARTHIKEYAN M	
16.	611215114083	KAVIN T	
17.	611215114089	KESAVANATHAN B	
18.	611215114091	KIRUBA S	
19.	611215114092	KISHORE K	
20.	611215114093	LINGESH K	
21.	611215114094	LOGANADHAN R	
22.	611215114095	LOGESH J	
23.	611215114096	LOGESH M	
24.	611215114097	LOGESHWARAN S	
25.	611215114098	MADHANKUMAR C	
26.	611215114099	MADHAVANATH J M	
27.	611215114103	MANIKANDAN S	
28.	611215114104	MANISHKUMAR K	
29.	611215114105	MANO K	
30.	611215114108	MANOJ KUMAR S	
31.	611215114116	MOHAN A K	
32.	611215114119	MOHANKUMAR R	
33.	611215114121	MOHAN KUMAR A P	
34.	611215114123	MUGUNTHA ADITYA R	
35.	611215114124	MURALI R	
36.	611215114128	MUTHUKUMAR S	
37.	611215114136	NIRMAL S	
38.	611215114146	POTHIGAI SELVAN M	
39.	611215114192	SATHISH KUMAR C	
40.	611215114206	SRIRAM N	
41.	611215114218	TAMILSELVAN S	
42.	611215114244	WINSLETVASANTHRAAJ T S	
43.	611215114341	VENKATESHWARAN M	

30/07/2018

FACULTY I/C

HOD/MECH

PRINCIPAL

Principal,
Knowledge Institute of Technology
Kakapalayam (Po), Salem-637 504

KNOWLEDGE INSTITUTE OF TECHNOLOGY Department of Mechanical Engineering A.Y:2018-19 Course Plan (2019 Batch) Date:30.07.2018				
Name of the COE		IAPMO-India – KIOT, Centre of Excellence		
Name of the Course		HVAC Design and Project Installation Engineer	**Semester**	07 & 08
Name of the Module	**Topics to be covered**	**Faculty Name**	**Number of Hours**	**Faculty Signature**
Ducting Design for all air HVAC system	Air terminal selection, Cold storage selection, Selection of Materials of Ducts, Primary and secondary pump selections Duct material selection, Selection of cooling tower Selection of Chillers, AHU and FCU classification and selection.	Mr.J.Ramesh, Mr.R.Isaac & Mr.S.Rajesh.	30	
Cost Estimation for a Specific Project	Calculate Plant Tonnage, Develop Vendor Short List, Obtain Chiller Bid, Adjust for Other First-Cost Impacts, Estimate Utility Costs, Estimate Maintenance Costs, Calculate Life-cycle Costs, Final Chiller Selection	Mr.R.Isaac Mr.J.Ramesh & Mr.S.Surendar.	30	
		Total No.of Hours	**60**	

Detailed Execution Plan

Name of the Course Module: 3.Ducting Design for all air HVAC system

Duration: 30 hours

Module No.	Name of the Module	Teaching Hours	Practical Hours	Self-Study Hours	Course Plan (Day wise)
3.1	Orientation of Building	2	-	-	Day 1
3.2	Orientation of Building	1	-	1	Day 2
3.3	To Read Latitude & Location of building	2	-	-	Day 3
3.4	Difference for wall, glass, Roof and Partition	1	-	1	Day 4
3.5	Cooling and Heat Load Calculation	2	-	-	Day 5
3.6	Cooling and Heat Load Calculation	2	-	-	Day 6
3.7	Cooling and Heat Load Calculation	1	-	1	Day 7
3.8	Calculation of sensible Heat Factor	2	-	-	Day 8
3.9	Calculation of sensible Heat Factor	2	-	-	Day 9
3.10	ADP and Dehumidified CFM	2	-	-	Day 10

Principal,
Knowledge Institute of Technology
Kakapalayam (Po), Salem-637 504

3.11	ADP and Dehumidified CFM	1	-	1	Day 11
3.12	Chilled water system & Equipment Selection	2	-	-	Day 12
3.13	Chilled water system & Equipment Selection	1	-	1	Day 13
3.14	Study & Preparation of Floor Drawings Roof Drawings	2	-	-	Day 14
3.15	Study & Preparation of Floor Drawings Roof Drawings	1	-	1	Day 15

Detailed Execution Plan

Name of the Course Module: 4. Cost Estimation for a Specific Project

Duration: 30 hours

Module No.	Name of the Module	Teaching Hours	Practical Hours	Self-Study Hours	Course Plan (Day wise)
4.1	Calculate Plant Tonnage	2	-	-	Day 1
4.2	Calculate Plant Tonnage	2	-	-	Day 2
4.3	Calculate Plant Tonnage	1	-	1	Day 3
4.4	Develop Vendor Short List	2	-	-	Day 4
4.5	Develop Vendor Short List	2	-	-	Day 5
4.6	Obtain Chiller Bids	2	-	-	Day 6
4.7	Obtain Chiller Bids	1	-	1	Day 7
4.8	Adjust for Other First-Cost Impacts	2	-	-	Day 8
4.9	Adjust for Other First-Cost Impacts	1	-	1	Day 9
4.10	Estimate Utility Costs	2	-	-	Day 10
4.11	Estimate Utility Costs	2	-	-	Day 11
4.12	Estimate Maintenance Costs	2	-	-	Day 12
4.13	Estimate Maintenance Costs	1	-	1	Day 13
4.14	Final Chiller Selection	2	-	-	Day 14
4.15	Final Chiller Selection	1	-	1	Day 15

FACULTY I/C

HOD/MECH

PRINCIPAL

Principal,
Knowledge Institute of Technology,
Kanjalavam (Po), Salem-637 504

KNOW[illegible]EDGE INSTITUTE OF TECHNOLOGY, SAL[illegible]1-637504

DEPARTMENT OF MECHANICAL ENGINEERING

CENTER FOR HEATING VENTILATION AND AIR CONDITIONING

BATCH-2015-19 / **Ducting Design for all Air HVAC System** / Academic Year/ SEM: 2018-19 / ODD Date: 30.08.2018

S.No	Reg.No	Name of the student	Year / Sem	09. 08. 2018	10. 08. 2018	11. 08. 2018	13. 08. 2018	14. 08. 2018	16. 08. 2018	17. 08. 2018	20. 08. 2018	21. 08. 2018	23. 08. 2018	24. 08. 2018	27. 08. 2018	28. 08. 2018	29. 08. 2018	30. 08. 2018
1.	611215114001	ABISHEK HUSSAIN J	IV/ VII															
2.	611215114002	ABISHIEK B	IV/ VII															
3.	611215114003	ADITHYA R	IV/ VII															
4.	611215114004	ADITYA R	IV/ VII															
5.	611215114011	ARULBALAJI S	IV/ VII															
6.	611215114013	ARUNACHALAM K	IV/ VII															
7.	611215114014	ARUNKUMAR P	IV/ VII															
8.	611215114016	ASIK RAM K P	IV/ VII															
9.	611215114027	CHANDRAPRAKASH K	IV/ VII															
10.	611215114039	DINESH.P	IV/ VII															
11.	611215114046	GOKUL S	IV/ VII															
12.	611215114048	GOKULRAJ S	IV/ VII															
13.	611215114050	GOPIKANNAN R	IV/ VII															
14.	611215114051	GOVINDARAJ S	IV/ VII															
15.	611215114079	KARTHIKEYAN M	IV/ VII															
16.	611215114083	KAVIN T	IV/ VII															
17.	611215114089	KESAVANATHAN B	IV/ VII															
18.	611215114091	KIRUBA S	IV/ VII															
19.	611215114092	KISHORE K	IV/ VII															
20.	611215114093	LINGESH K	IV/ VII															
21.	611215114094	LOGANADHAN R	IV/ VII															

Principal,
Knowledge Institute of Technology
Kaipalavam (Po), Salem-637 504

22.	611215114095	LOGESH J	IV/ VII	/	/	/	/	/	/	/	/	/	/	/	/	/	/	/	/	/	/
23.	611215114096	LOGESH M	IV/ VII	/	/	/	/	/	/	/	/	/	/	/	/	/	/	/	/	/	/
24.	611215114097	LOGESHWARAN S	IV/ VII	/	/	/	/	/	/	/	/	/	/	/	/	/	/	/	/	/	/
25.	611215114098	MADHANKUMAR C	IV/ VII	/	/	/	/	/	/	/	/	/	/	/	/	/	/	/	/	/	/
26.	611215114099	MADHAVANATH J M	IV/ VII	/	/	/	/	/	/	/	/	/	/	/	/	/	/	/	/	/	/
27.	611215114103	MANIKANDAN S	IV/ VII	/	/	/	/	/	/	/	/	/	/	/	/	/	/	/	/	/	/
28.	611215114104	MANISHKUMAR K	IV/ VII	/	/	/	/	/	/	/	/	a	/	/	/	/	/	/	/	/	/
29.	611215114105	MANO K	IV/ VII	/	/	/	/	/	/	/	/	/	/	/	/	/	/	/	/	/	/
30.	611215114108	MANOJ KUMAR S	IV/ VII	/	/	/	/	/	/	/	/	/	/	/	/	/	/	/	/	/	/
31.	611215114116	MOHAN A K	IV/ VII	/	/	a	/	/	/	/	/	/	/	/	/	/	/	/	/	/	/
32.	611215114119	MOHANKUMAR R	IV/ VII	/	/	/	/	/	/	/	/	/	/	/	/	/	/	/	/	/	/
33.	611215114121	MOHAN KUMAR A P	IV/ VII	/	/	/	/	/	/	/	/	/	/	/	/	/	/	/	/	/	/
34.	611215114123	MUGUNTHA ADITYA R	IV/ VII	/	/	/	/	/	/	/	/	/	/	/	/	/	/	/	/	/	/
35.	611215114124	MURALI R	IV/ VII	/	/	/	/	/	/	/	/	/	/	/	/	/	/	/	/	/	/
36.	611215114128	MUTHUKUMAR S	IV/ VII	/	/	/	/	/	/	/	/	/	/	/	/	/	/	/	/	/	/
37.	611215114136	NIRMAL S	IV/ VII	/	/	/	/	/	/	/	/	/	/	/	/	/	/	/	/	/	/
38.	611215114146	POTHIGAI SELVAN M	IV/ VII	/	/	/	/	/	/	/	/	/	/	/	/	/	/	/	/	/	/
39.	611215114192	SATHISH KUMAR C	IV/ VII	/	/	/	/	/	/	/	/	/	/	/	/	/	/	a	/	/	/
40.	611215114206	SRIRAM N	IV/ VII	/	/	/	/	/	/	/	/	/	/	/	/	/	/	/	/	/	/
41.	611215114218	TAMILSELVAN S	IV/ VII	/	/	/	/	/	a	/	/	/	/	/	/	/	/	/	/	/	/
42.	611215114244	WINSLETVASANTHRAAJ T S	IV/ VII	/	/	/	/	/	/	/	/	/	/	/	/	/	/	/	/	/	/
43.	611215114341	VENKATESHWARAN M	IV/ VII	/	/	/	/	/	/	/	/	/	/	/	/	/	/	/	/	/	/
			No. of Students Present	43	43	41	43	43	41	43	43	42	43	43	42	42	43	43
			No. of Students Absent	NIL	NIL	02	NIL	NIL	02	NIL	NIL	01	NIL	NIL	01	01	NIL	NIL
			Faculty Signature															

FACULTY I/C

HoD/MECH

Principal,
Knowledge Institute of Technology,
Kanjalavam (Po), Salem-637 504

PRINCIPAL

KNOWLEDGE INSTITUTE OF TECHNOLOGY					
DEPARTMENT OF MECHANICAL ENGINEERING					
IAPMO-India – KIOT, Centre of Excellence					
Subject Name	Ducting Design for all air HVAC system				
Name of the Student	Abishek-B				
Register No	611215114002				
Date	04/09/2018	Duration	60 Minutes	Max.Marks	50
Faculty Name	Marks Awarded				
S.S.REMYA	37		THIRTY SEVEN		
Faculty Signature					

ANSWER ALL THE QUESTIONS-(50X01=50)

1. What is the symbol for impedance?
   a. R b. I c. Z d. P
2. The safety ground conductor for A/C circuit is usually color coded _____.
   a. red b. green c. black d. white
3. Heat which causes a change in temperature of a substance is called:
   a. latent heat. b. sensible heat. c. superheat. d. regular heat.
4. What is heat, which causes a change in the state of a material without a change in temperature, called?
   a. Latent heat b. Sensible heat c. Superheat d. Regular heat
5. What is a sling psychrometer used to measure?
   a. Latent heat b. Super heat c. Wet and dry bulb temperature d. Barometric pressure
6. A compressor is operating with a discharge pressure of 235.3 psig and a suction pressure of 35.3 psig. What is the compression ratio (pumping ratio)?
   a. 10:1 b. 8:1 c. 7:1 d. 5:1
7. In a (direct expansion) evaporator, liquid refrigerant must boil away as close to the end of the coil as possible in order to:
   a. ensure proper oil return. b. ensure that frost does not accumulate.
   c. sub-cool the compressor. d. operate at high efficiency.
8. An thermal expansion valve that is stuck wide open will cause _____.
   a. low suction pressure b. a flooded evaporator
   c. excessive superheat d. a starved evaporator
9. What is the major difference between a heat pump and an air conditioner?
   a. Condenser b. Thermostatic expansion valve
   c. Evaporator d. Reversing valve
10. What device controls the supplementary electric heat according to the outdoor temperature?
    a. Auxiliary temperature control b. Outdoor auxiliary thermostat
    c. Outdoor ambient thermostat d. Indoor thermostat only
11. Which of the following is not a factor that should be considered when installing an outdoor unit?
    a. Return air b. Wind factors c. Sound transmission d. Snow fall
12. What is the minimum clearance for access panels on an outdoor condensing unit?
    a. 36 inches b. 30 inches c. 15 inches d. 10 inches
13. One BTU is the amount of heat required to raise the temperature of:
    a. one pound of ice one-degree Fahrenheit. b. one pound of water one-degree Fahrenheit.
    c. one gallon of water one-degree Fahrenheit. d. one gallon of water eight degrees Fahrenheit.
14. what is the primary composition of natural gas?
    a. 65 percent methane b. 75 percent methane c. 85 percent methane d. 95 percent methane
15. The electric heat element is usually made of what material?
    a. Copper with a brass coating b. Nickel with a cadmium coating
    c. Nickel and steel d. Nickel and chromium
16. Which of the following is an example of a resistive load?
    a. Bimetal switch b. Crankcase heater c. Transformer d. Motor
17. An oversized heating and cooling system can cause which of the following?
    a. Operating cost and relative humidity in the structure will decrease significantly.
    b. Moisture damage to a furnace heat exchanger and inadequate humidity removal during cooling cycles.

Principal,
Knowledge Institute of Technology
Kakapalayam (Po), Salem-637 504.

c. The structure will develop low humidity levels in the cooling season and high humidity in the winter.

d. Equipment will last longer and require less energy to operate due to the shorter run time.

18. When the temperatures of a structure both inside and outside are equal, there is _____.
a. no heat transfer b. latent heat transfer to the outside
c. thermal heat transfer of sensible heat d. a lower rate of relative humidity

19. Polyolester (POE) oils stored in plastic containers will _____.
a. separate b. become more alkaline
c. become acidic d. absorb moisture through the plastic

20. R-407C has _____.
a. a foul odor b. to be charged in the vapor phase
c. the ability to fractionate d. no temperature glide

21. What is a carbon footprint?
a. The carbon deposits from burning gasoline.
b. The amount of carbon dioxide that is produced to support your lifestyle.
c. The amount of carbon in the atmosphere produced by the world's lifestyle.
d. The amount of carbon in the stratosphere.

22. What is energy management?
a. A rule that the total amount of energy stays constant in an isolated system over time.
b. Recovering energy lost while using mechanical equipment.
c. Reading the electric and fuel gas meters every month.
d. The monitoring and controlling of energy consuming devices.

23. The function of duct in air conditioning unit is:
(a) air cooling (b) air cleaning (c) air drying (d) air distribution

24. Process of changing solid into vapour state without passing through liquid state is:
(a) super heating (b) sublimation (c) subcooling (d) triple point

25. -Amount of heat required to raise the temperature of one unit of substance through 1 degree is called:
(a) C.H.U. (b) B.T.U. (c) Calorie (d) Specific heat

26. The COP of a domestic air conditioning in comparison to domestic refrigerator will be:
(a) same (b) less (c) more (d) depends upon weather conditions

27. Solenoid valve is operated:
(a) electrically (b) by hand (c) by gas pressure (d) by oil pressure

28. Subcooling is a process of cooling the refrigerant in vapour compression refrigeration system before:
(a) evaporation (b) throttling (c) condensation (d) compression

29. Pump down the system for:
(a) more cooling effect (b) to check compressor efficiency
(c) gas charging (d) to attend maintenance in low side

30. A thermostatic expansion valve function with
(a) suction pressure (b) discharge pressure
(c) discharge temperature (d) suction temperature

31. The colour of the flame of halide torch in case of leakage of Freon refrigerant will change t:
(a) purple (b) pink (c) bright green (d) blue

32. Liquid charged in thermostatic expansion valves sensing bulb is:
(a) alcohol (b) same refrigerant (c) mercury (d) nitrogen

33. The oil used with 134A refrigerant is:
(a) mineral oil (b) capilla d (c) polyol ester oil (d) lubricating oil

34. 26-The difference between DBT and WBT is called:
(a) wet bulb depression (b) dew point depression
(c) effective temperature (d) adiabatic saturation temperature

35. 27-A device which is used to find relative humidity:
(a) pyrometer (b) anemometer (c) hydrometer (d) hygrometer

36. Which type of valve is used in a reciprocating refrigeration compressor?
(a) rotary valve (b) poppet valve (c) ring plate (d) glob valve

37. The capacity of visible cooler is expressed in:
(a) cubic feet (b) litres (c) k.cal/tr (d) tons of refrigeration

38. Chemical name of Freon 22 is
(a) dichloro difluoro methane (b) monochloro difluoro methane

Principal,
Knowledge Institute of Technology
[illegible] (Po), Salem-637 50[illegible]

(c) trichloro monofluoro methane (d) dichloro monofluoro methane

39. Which of the following refrigerant has the lowest boiling point?
(a) carbon dioxide (b) ammonia (c) hydrogen (d) freon 12

40. Auto defrost is operated by
(a) evaporator fan (b) thermostat (c) timer watch (d) heating element

41. The absolute zero temperature corresponds on the condition when
(a) all the substances exit only as solids (b) volume of a gas reduces to zero
(c) kinetic energy of gas molecules becomes zero (d) no pressure is exerted by the gas

42. Sum of atmospheric pressure and gauge pressure is called
(a) total pressure (b) absolute pressure (c) normal pressure (d) natural pressure

43. The effectiveness of the cooling tower is dependent on:
(a) dry bulb temperature of the air (b) direction of the flow of air
(c) wet bulb temperature of the air (d) none of the above

44. One micron of vaccum is equal to
(a) 0.1 mm hg (b) 0.01 mm hg (c) 0.001 mm hg (d) 0.0001 mm hg

45. In a flooded evaporator which of the following types of expansion device is employed?
(a) float valve (b) capillary tube
(c) automatic expansion valve (d) thermostatic expansion valve

46. In a thermal electric expansion valve which senses the suction temperature is
(a) transformer (b) thermister (c) thermostat (d) rheostat

47. 40-The specific humidity is the mass of water vapour present in
(a) 1 kg of dry air (b) 1 m3 of dry air (c) 1 m3 of wet air (d) 1 kg of wet air

48. In psychrometric chart, specific humidity lines are:
(a) vertical (b) horizontal (c) inclined (d) curved lines

49. Accumulator is provided for
(a) storing of liquid refrigerant (b) exchange of heat
(c) storing of unvaporized liquid (d) condensing gas

50. Oil separator if fitted in between
(a) condenser and evaporator (b) on the suction line
(c) compressor and condenser (d) at the receiver outlet

FACULTY I/C

HOD/MECH

Principal,
Knowledge Institute of Technology
Kakapalayam (Po), Salem-637 504

KNOWLEDGE INSTITUTE OF TECHNOLOGY					
DEPARTMENT OF MECHANICAL ENGINEERING					
IAPMO-India – KIOT, Centre of Excellence					
Subject Name	Ducting Design for all air HVAC system				
Name of the Student	Murali . R				
Register No	611215114124				
Date	04/09/2018	Duration	60 Minutes	Max.Marks	50
Faculty Name	Marks Awarded				
Faculty Signature	41		FOUR ONE		

ANSWER ALL THE QUESTIONS-(50X01=50)

1. What is the symbol for impedance?
   a. R b. I c. Z d. P
2. The safety ground conductor for A/C circuit is usually color coded _____.
   a. red b. green c. black d. white
3. Heat which causes a change in temperature of a substance is called:
   a. latent heat. b. sensible heat. c. superheat. d. regular heat.
4. What is heat, which causes a change in the state of a material without a change in temperature, called?
   a. Latent heat b. Sensible heat c. Superheat d. Regular heat
5. What is a sling psychrometer used to measure?
   a. Latent heat b. Super heat c. Wet and dry bulb temperature d. Barometric pressure
6. A compressor is operating with a discharge pressure of 235.3 psig and a suction pressure of 35.3 psig. What is the compression ratio (pumping ratio)?
   a. 10:1 b. 8:1 c. 7:1 d. 5:1
7. In a (direct expansion) evaporator, liquid refrigerant must boil away as close to the end of the coil as possible in order to:
   a. ensure proper oil return. b. ensure that frost does not accumulate.
   c. sub-cool the compressor. d. operate at high efficiency.
8. An thermal expansion valve that is stuck wide open will cause _____.
   a. low suction pressure b. a flooded evaporator
   c. excessive superheat d. a starved evaporator
9. What is the major difference between a heat pump and an air conditioner?
   a. Condenser b. Thermostatic expansion valve
   c. Evaporator d. Reversing valve
10. What device controls the supplementary electric heat according to the outdoor temperature?
    a. Auxiliary temperature control b. Outdoor auxiliary thermostat
    c. Outdoor ambient thermostat d. Indoor thermostat only
11. Which of the following is not a factor that should be considered when installing an outdoor unit?
    a. Return air b. Wind factors c. Sound transmission d. Snow fall
12. What is the minimum clearance for access panels on an outdoor condensing unit?
    a. 36 inches b. 30 inches c. 15 inches d. 10 inches
13. One BTU is the amount of heat required to raise the temperature of:
    a. one pound of ice one-degree Fahrenheit. b. one pound of water one-degree Fahrenheit.
    c. one gallon of water one-degree Fahrenheit. d. one gallon of water eight degrees Fahrenheit.
14. what is the primary composition of natural gas?
    a. 65 percent methane b. 75 percent methane c. 85 percent methane d. 95 percent methane
15. The electric heat element is usually made of what material?
    a. Copper with a brass coating b. Nickel with a cadmium coating
    c. Nickel and steel d. Nickel and chromium
16. Which of the following is an example of a resistive load?
    a. Bimetal switch b. Crankcase heater c. Transformer d. Motor
17. An oversized heating and cooling system can cause which of the following?
    a. Operating cost and relative humidity in the structure will decrease significantly.
    b. Moisture damage to a furnace heat exchanger and inadequate humidity removal during cooling cycles.

Principal,
Knowledge Institute of Technology
Kalavam (Po), Salem-637 504

c. The structure will develop low humidity levels in the cooling season and high humidity in the winter.

d. Equipment will last longer and require less energy to operate due to the shorter run time.

18. When the temperatures of a structure both inside and outside are equal, there is _____.
a. no heat transfer b. latent heat transfer to the outside
c. thermal heat transfer of sensible heat d. a lower rate of relative humidity

19. Polyolester (POE) oils stored in plastic containers will _____.
a. separate b. become more alkaline
c. become acidic d. absorb moisture through the plastic

20. R-407C has _____.
a. a foul odor b. to be charged in the vapor phase
c. the ability to fractionate d. no temperature glide

21. What is a carbon footprint?
a. The carbon deposits from burning gasoline.
b. The amount of carbon dioxide that is produced to support your lifestyle.
c. The amount of carbon in the atmosphere produced by the world's lifestyle.
d. The amount of carbon in the stratosphere.

22. What is energy management?
a. A rule that the total amount of energy stays constant in an isolated system over time.
b. Recovering energy lost while using mechanical equipment.
c. Reading the electric and fuel gas meters every month.
d. The monitoring and controlling of energy consuming devices.

23. The function of duct in air conditioning unit is:
(a) air cooling (b) air cleaning (c) air drying (d) air distribution

24. Process of changing solid into vapour state without passing through liquid state is:
(a) super heating (b) sublimation (c) subcooling (d) triple point

25. -Amount of heat required to raise the temperature of one unit of substance through 1 degree is called:
(a) C.H.U. (b) B.T.U. (c) Calorie (d) Specific heat

26. The COP of a domestic air conditioning in comparison to domestic refrigerator will be:
(a) same (b) less (c) more (d) depends upon weather conditions

27. Solenoid valve is operated:
(a) electrically (b) by hand (c) by gas pressure (d) by oil pressure

28. Subcooling is a process of cooling the refrigerant in vapour compression refrigeration system before:
(a) evaporation (b) throttling (c) condensation (d) compression

29. Pump down the system for:
(a) more cooling effect (b) to check compressor efficiency
(c) gas charging (d) to attend maintenance in low side

30. A thermostatic expansion valve function with
(a) suction pressure (b) discharge pressure
(c) discharge temperature (d) suction temperature

31. The colour of the flame of halide torch in case of leakage of Freon refrigerant will change t:
(a) purple (b) pink (c) bright green (d) blue

32. Liquid charged in thermostatic expansion valves sensing bulb is:
(a) alcohol (b) same refrigerant (c) mercury (d) nitrogen

33. The oil used with 134A refrigerant is:
(a) mineral oil (b) capilla d (c) polyol ester oil (d) lubricating oil

34. 26-The difference between DBT and WBT is called:
(a) wet bulb depression (b) dew point depression
(c) effective temperature (d) adiabatic saturation temperature

35. 27-A device which is used to find relative humidity:
(a) pyrometer (b) anemometer (c) hydrometer (d) hygrometer

36. Which type of valve is used in a reciprocating refrigeration compressor?
(a) rotary valve (b) poppet valve (c) ring plate (d) glob valve

37. The capacity of visible cooler is expressed in:
(a) cubic feet (b) litres (c) k.cal/tr (d) tons of refrigeration

38. Chemical name of Freon 22 is
(a) dichloro difluoro methane (b) monochloro difluoro methane

Principal,
Knowledge Institute of Technology
Kanalayam (Po), Salem-637 504

(c) trichloro monofluoro methane (d) dichloro monofluoro methane

39. Which of the following refrigerant has the lowest boiling point?
(a) carbon dioxide (b) ammonia (c) hydrogen (d) freon 12

40. Auto defrost is operated by
(a) evaporator fan (b) thermostat (c) timer watch (d) heating element

41. The absolute zero temperature corresponds on the condition when
(a) all the substances exit only as solids (b) volume of a gas reduces to zero
(c) kinetic energy of gas molecules becomes zero (d) no pressure is exerted by the gas

42. Sum of atmospheric pressure and gauge pressure is called
(a) total pressure (b) absolute pressure (c) normal pressure (d) natural pressure

43. The effectiveness of the cooling tower is dependent on:
(a) dry bulb temperature of the air (b) direction of the flow of air
(c) wet bulb temperature of the air (d) none of the above

44. One micron of vaccum is equal to
(a) 0.1 mm hg (b) 0.01 mm hg (c) 0.001 mm hg (d) 0.0001 mm hg

45. In a flooded evaporator which of the following types of expansion device is employed?
(a) float valve (b) capillary tube
(c) automatic expansion valve (d) thermostatic expansion valve

46. In a thermal electric expansion valve which senses the suction temperature is
(a) transformer (b) thermister (c) thermostat (d) rheostat

47. 40-The specific humidity is the mass of water vapour present in
(a) 1 kg of dry air (b) 1 m3 of dry air (c) 1 m3 of wet air (d) 1 kg of wet air

48. In psychrometric chart, specific humidity lines are:
(a) vertical (b) horizontal (c) inclined (d) curved lines

49. Accumulator is provided for
(a) storing of liquid refrigerant (b) exchange of heat
(c) storing of unvaporized liquid (d) condensing gas

50. Oil separator if fitted in between
(a) condenser and evaporator (b) on the suction line
(c) compressor and condenser (d) at the receiver outlet

FACULTY I/C

HOD/MECH

Principal,
Knowledge Institute of Technology
Kakapalayam (Po), Salem-637 504

KNOWLEDGE INSTITUTE OF TECHNOLOGY					
DEPARTMENT OF MECHANICAL ENGINEERING					
IAPMO-India – KIOT, Centre of Excellence					
Subject Name	Ducting Design for all air HVAC system				
Name of the Student	Venkateshwaran. M				
Register No	611815114 341				
Date	04-09-2018	Duration	60 Minutes	Max.Marks	50
Faculty Name	Marks Awarded				
Faculty Signature	45		FOUR FIVE		

ANSWER ALL THE QUESTIONS-(50X01=50)

1. What is the symbol for impedance?
   a. R b. I c. Z d. P
2. The safety ground conductor for A/C circuit is usually color coded _____.
   a. red b. green c. black d. white
3. Heat which causes a change in temperature of a substance is called:
   a. latent heat. b. sensible heat. c. superheat. d. regular heat.
4. What is heat, which causes a change in the state of a material without a change in temperature, called?
   a. Latent heat b. Sensible heat c. Superheat d. Regular heat
5. What is a sling psychrometer used to measure?
   a. Latent heat b. Super heat c. Wet and dry bulb temperature d. Barometric pressure
6. A compressor is operating with a discharge pressure of 235.3 psig and a suction pressure of 35.3 psig. What is the compression ratio (pumping ratio)?
   a. 10:1 b. 8:1 c. 7:1 d. 5:1
7. In a (direct expansion) evaporator, liquid refrigerant must boil away as close to the end of the coil as possible in order to:
   a. ensure proper oil return. b. ensure that frost does not accumulate.
   c. sub-cool the compressor. d. operate at high efficiency.
8. An thermal expansion valve that is stuck wide open will cause _____.
   a. low suction pressure b. a flooded evaporator
   c. excessive superheat d. a starved evaporator
9. What is the major difference between a heat pump and an air conditioner?
   a. Condenser b. Thermostatic expansion valve
   c. Evaporator d. Reversing valve
10. What device controls the supplementary electric heat according to the outdoor temperature?
    a. Auxiliary temperature control b. Outdoor auxiliary thermostat
    c. Outdoor ambient thermostat d. Indoor thermostat only
11. Which of the following is not a factor that should be considered when installing an outdoor unit?
    a. Return air b. Wind factors c. Sound transmission d. Snow fall
12. What is the minimum clearance for access panels on an outdoor condensing unit?
    a. 36 inches b. 30 inches c. 15 inches d. 10 inches
13. One BTU is the amount of heat required to raise the temperature of:
    a. one pound of ice one-degree Fahrenheit. b. one pound of water one-degree Fahrenheit.
    c. one gallon of water one-degree Fahrenheit. d. one gallon of water eight degrees Fahrenheit.
14. what is the primary composition of natural gas?
    a. 65 percent methane b. 75 percent methane c. 85 percent methane d. 95 percent methane
15. The electric heat element is usually made of what material?
    a. Copper with a brass coating b. Nickel with a cadmium coating
    c. Nickel and steel d. Nickel and chromium
16. Which of the following is an example of a resistive load?
    a. Bimetal switch b. Crankcase heater c. Transformer d. Motor
17. An oversized heating and cooling system can cause which of the following?
    a. Operating cost and relative humidity in the structure will decrease significantly.
    b. Moisture damage to a furnace heat exchanger and inadequate humidity removal during cooling cycles.

Principal,
Knowledge Institute of Technology,
Kanjikovil (Po), Salem-637 504

c. The structure will develop low humidity levels in the cooling season and high humidity in the winter.

d. Equipment will last longer and require less energy to operate due to the shorter run time.

18. When the temperatures of a structure both inside and outside are equal, there is _____.
a. no heat transfer b. latent heat transfer to the outside
c. thermal heat transfer of sensible heat d. a lower rate of relative humidity

19. Polyolester (POE) oils stored in plastic containers will _____.
a. separate b. become more alkaline
c. become acidic d. absorb moisture through the plastic

20. R-407C has _____.
a. a foul odor b. to be charged in the vapor phase
c. the ability to fractionate d. no temperature glide

21. What is a carbon footprint?
a. The carbon deposits from burning gasoline.
b. The amount of carbon dioxide that is produced to support your lifestyle.
c. The amount of carbon in the atmosphere produced by the world's lifestyle.
d. The amount of carbon in the stratosphere.

22. What is energy management?
a. A rule that the total amount of energy stays constant in an isolated system over time.
b. Recovering energy lost while using mechanical equipment.
c. Reading the electric and fuel gas meters every month.
d. The monitoring and controlling of energy consuming devices.

23. The function of duct in air conditioning unit is:
(a) air cooling (b) air cleaning (c) air drying (d) air distribution

24. Process of changing solid into vapour state without passing through liquid state is:
(a) super heating (b) sublimation (c) subcooling (d) triple point

25. -Amount of heat required to raise the temperature of one unit of substance through 1 degree is called:
(a) C.H.U. (b) B.T.U. (c) Calorie (d) Specific heat

26. The COP of a domestic air conditioning in comparison to domestic refrigerator will be:
(a) same (b) less (c) more (d) depends upon weather conditions

27. Solenoid valve is operated:
(a) electrically (b) by hand (c) by gas pressure (d) by oil pressure

28. Subcooling is a process of cooling the refrigerant in vapour compression refrigeration system before:
(a) evaporation (b) throttling (c) condensation (d) compression

29. Pump down the system for:
(a) more cooling effect (b) to check compressor efficiency
(c) gas charging (d) to attend maintenance in low side

30. A thermostatic expansion valve function with
(a) suction pressure (b) discharge pressure
(c) discharge temperature (d) suction temperature

31. The colour of the flame of halide torch in case of leakage of Freon refrigerant will change t:
(a) purple (b) pink (c) bright green (d) blue

32. Liquid charged in thermostatic expansion valves sensing bulb is:
(a) alcohol (b) same refrigerant (c) mercury (d) nitrogen

33. The oil used with 134A refrigerant is:
(a) mineral oil (b) capilla d (c) polyol ester oil (d) lubricating oil

34. 26-The difference between DBT and WBT is called:
(a) wet bulb depression (b) dew point depression
(c) effective temperature (d) adiabatic saturation temperature

35. 27-A device which is used to find relative humidity:
(a) pyrometer (b) anemometer (c) hydrometer (d) hygrometer

36. Which type of valve is used in a reciprocating refrigeration compressor?
(a) rotary valve (b) poppet valve (c) ring plate (d) glob valve

37. The capacity of visible cooler is expressed in:
(a) cubic feet (b) litres (c) k.cal/tr (d) tons of refrigeration

38. Chemical name of Freon 22 is
(a) dichloro difluoro methane (b) monochloro difluoro methane

Principal,
Knowledge Institute of Technology
Kadalavam (Po), Salem-637 504

(c) trichloro monofluoro methane (d) dichloro monofluoro methane

39. Which of the following refrigerant has the lowest boiling point?
(a) carbon dioxide (b) ammonia (c) hydrogen (d) freon 12

40. Auto defrost is operated by
(a) evaporator fan (b) thermostat (c) timer watch (d) heating element

41. The absolute zero temperature corresponds on the condition when
(a) all the substances exit only as solids (b) volume of a gas reduces to zero
(c) kinetic energy of gas molecules becomes zero (d) no pressure is exerted by the gas

42. Sum of atmospheric pressure and gauge pressure is called
(a) total pressure (b) absolute pressure (c) normal pressure (d) natural pressure

43. The effectiveness of the cooling tower is dependent on:
(a) dry bulb temperature of the air (b) direction of the flow of air
(c) wet bulb temperature of the air (d) none of the above

44. One micron of vaccum is equal to
(a) 0.1 mm hg (b) 0.01 mm hg (c) 0.001 mm hg (d) 0.0001 mm hg

45. In a flooded evaporator which of the following types of expansion device is employed?
(a) float valve (b) capillary tube
(c) automatic expansion valve (d) thermostatic expansion valve

46. In a thermal electric expansion valve which senses the suction temperature is
(a) transformer (b) thermister (c) thermostat (d) rheostat

47. 40-The specific humidity is the mass of water vapour present in
(a) 1 kg of dry air (b) 1 m3 of dry air (c) 1 m3 of wet air (d) 1 kg of wet air

48. In psychrometric chart, specific humidity lines are:
(a) vertical (b) horizontal (c) inclined (d) curved lines

49. Accumulator is provided for
(a) storing of liquid refrigerant (b) exchange of heat
(c) storing of unvaporized liquid (d) condensing gas

50. Oil separator if fitted in between
(a) condenser and evaporator (b) on the suction line
(c) compressor and condenser (d) at the receiver outlet

FACULTY I/C

HOD/MECH

Principal,
Knowledge Institute of Technology
Kakapalayam (Po), Salem-637 504

KNOWLEDGE INSTITUTE OF TECHNOLOGY					
DEPARTMENT OF MECHANICAL ENGINEERING					
IAPMO-India – KIOT, Centre of Excellence					
Subject Name	Ducting Design for all air HVAC system				
Name of the Student	Dinesh.P				
Register No	611215114039				
Date	4/9/2018	Duration	60 Minutes	Max.Marks	50
Faculty Name	Marks Awarded				
Faculty Signature	32		THIRTY TWO		

ANSWER ALL THE QUESTIONS-(50X01=50)

1. What is the symbol for impedance?
   a. R b. I c. Z d. P
2. The safety ground conductor for A/C circuit is usually color coded _____.
   a. red b. green c. black d. white
3. Heat which causes a change in temperature of a substance is called:
   a. latent heat. b. sensible heat. c. superheat. d. regular heat.
4. What is heat, which causes a change in the state of a material without a change in temperature, called?
   a. Latent heat b. Sensible heat c. Superheat d. Regular heat
5. What is a sling psychrometer used to measure?
   a. Latent heat b. Super heat c. Wet and dry bulb temperature d. Barometric pressure
6. A compressor is operating with a discharge pressure of 235.3 psig and a suction pressure of 35.3 psig. What is the compression ratio (pumping ratio)?
   a. 10:1 b. 8:1 c. 7:1 d. 5:1
7. In a (direct expansion) evaporator, liquid refrigerant must boil away as close to the end of the coil as possible in order to:
   a. ensure proper oil return. b. ensure that frost does not accumulate.
   c. sub-cool the compressor. d. operate at high efficiency.
8. An thermal expansion valve that is stuck wide open will cause _____.
   a. low suction pressure b. a flooded evaporator
   c. excessive superheat d. a starved evaporator
9. What is the major difference between a heat pump and an air conditioner?
   a. Condenser b. Thermostatic expansion valve
   c. Evaporator d. Reversing valve
10. What device controls the supplementary electric heat according to the outdoor temperature?
   a. Auxiliary temperature control b. Outdoor auxiliary thermostat
   c. Outdoor ambient thermostat d. Indoor thermostat only
11. Which of the following is not a factor that should be considered when installing an outdoor unit?
   a. Return air b. Wind factors c. Sound transmission d. Snow fall
12. What is the minimum clearance for access panels on an outdoor condensing unit?
   a. 36 inches b. 30 inches c. 15 inches d. 10 inches
13. One BTU is the amount of heat required to raise the temperature of:
   a. one pound of ice one-degree Fahrenheit. b. one pound of water one-degree Fahrenheit.
   c. one gallon of water one-degree Fahrenheit. d. one gallon of water eight degrees Fahrenheit.
14. what is the primary composition of natural gas?
   a. 65 percent methane b. 75 percent methane c. 85 percent methane d. 95 percent methane
15. The electric heat element is usually made of what material?
   a. Copper with a brass coating b. Nickel with a cadmium coating
   c. Nickel and steel d. Nickel and chromium
16. Which of the following is an example of a resistive load?
   a. Bimetal switch b. Crankcase heater c. Transformer d. Motor
17. An oversized heating and cooling system can cause which of the following?
   a. Operating cost and relative humidity in the structure will decrease significantly.
   b. Moisture damage to a furnace heat exchanger and inadequate humidity removal during cooling cycles.

Principal,
Knowledge Institute of Technology
Kalavam (Po), Salem-637 504

c. The structure will develop low humidity levels in the cooling season and high h umidity in the winter.

d. Equipment will last longer and require less energy to operate due to the shorte r run time.

18. When the temperatures of a structure both inside and outside are equal, there is _____.
a. no heat transfer b. latent heat transfer to the outside
c. thermal heat transfer of sensible heatd. a lower rate of relative humidity

19. Polyolester (POE) oils stored in plastic containers will _____.
a. separate b. become more alkaline
c. become acidic d. absorb moisture through the plastic

20. R-407C has _____.
a. a foul odor b. to be charged in the vapor phase
c. the ability to fractionate d. no temperature glide

21. What is a carbon footprint?
a. The carbon deposits from burning gasoline.
b. The amount of carbon dioxide that is produced to support your lifestyle.
c. The amount of carbon in the atmosphere produced by the world's lifestyle.
d. The amount of carbon in the stratosphere.

22. What is energy management?
a. A rule that the total amount of energy stays constant in an isolated system over time.
b. Recovering energy lost while using mechanical equipment.
c. Reading the electric and fuel gas meters every month.
d. The monitoring and controlling of energy consuming devices.

23. The function of duct in air conditioning unit is:
(a) air cooling (b) air cleaning (c) air drying (d) air distribution

24. Process of changing solid into vapour state without passing through liquid state is:
(a) super heating (b) sublimation (c) subcooling (d) triple point

25. -Amount of heat required to raise the temperature of one unit of substance through 1 degree is called:
(a) C.H.U. (b) B.T.U. (c) Calorie (d) Specific heat

26. The COP of a domestic air conditioning in comparison to domestic refrigerator will be:
(a) same (b) less (c) more (d) depends upon weather conditions

27. Solenoid valve is operated:
(a) electrically (b) by hand (c) by gas pressure (d) by oil pressure

28. Subcooling is a process of cooling the refrigerant in vapour compression refrigeration system before:
(a) evaporation (b) throttling (c) condensation (d) compression

29. Pump down the system for:
(a) more cooling effect (b) to check compressor efficiency
(c) gas charging (d) to attend maintenance in low side

30. A thermostatic expansion valve function with
(a) suction pressure (b) discharge pressure
(c) discharge temperature (d) suction temperature

31. The colour of the flame of halide torch in case of leakage of Freon refrigerant will change t:
(a) purple (b) pink (c) bright green (d) blue

32. Liquid charged in thermostatic expansion valves sensing bulb is:
(a) alcohol (b) same refrigerant (c) mercury (d) nitrogen

33. The oil used with 134A refrigerant is:
(a) mineral oil (b) capilla d (c) polyol ester oil (d) lubricating oil

34. 26-The difference between DBT and WBT is called:
(a) wet bulb depression (b) dew point depression
(c) effective temperature (d) adiabatic saturation temperature

35. 27-A device which is used to find relative humidity:
(a) pyrometer (b) anemometer (c) hydrometer (d) hygrometer

36. Which type of valve is used in a reciprocating refrigeration compressor?
(a) rotary valve (b) poppet valve (c) ring plate (d) glob valve

37. The capacity of visible cooler is expressed in:
(a) cubic feet (b) litres (c) k.cal/tr (d) tons of refrigeration

38. Chemical name of Freon 22 is
(a) dichloro difluoro methane (b) monochloro difluoro methane

Principal,
Knowledge Institute of Technology
Kalavam (P.o), Salem-637 504

(c) trichloro monofluoro methane (d) dichloro monofluoro methane

39. Which of the following refrigerant has the lowest boiling point?
(a) carbon dioxide (b) ammonia (c) hydrogen (d) freon 12

40. Auto defrost is operated by
(a) evaporator fan (b) thermostat (c) timer watch (d) heating element

41. The absolute zero temperature corresponds on the condition when
(a) all the substances exit only as solids (b) volume of a gas reduces to zero
(c) kinetic energy of gas molecules becomes zero (d) no pressure is exerted by the gas

42. Sum of atmospheric pressure and gauge pressure is called
(a) total pressure (b) absolute pressure (c) normal pressure (d) natural pressure

43. The effectiveness of the cooling tower is dependent on:
(a) dry bulb temperature of the air (b) direction of the flow of air
(c) wet bulb temperature of the air (d) none of the above

44. One micron of vaccum is equal to
(a) 0.1 mm hg (b) 0.01 mm hg (c) 0.001 mm hg (d) 0.0001 mm hg

45. In a flooded evaporator which of the following types of expansion device is employed?
(a) float valve (b) capillary tube
(c) automatic expansion valve (d) thermostatic expansion valve

46. In a thermal electric expansion valve which senses the suction temperature is
(a) transformer (b) thermister (c) thermostat (d) rheostat

47. 40-The specific humidity is the mass of water vapour present in
(a) 1 kg of dry air (b) 1 m3 of dry air (c) 1 m3 of wet air (d) 1 kg of wet air

48. In psychrometric chart, specific humidity lines are:
(a) vertical (b) horizontal (c) inclined (d) curved lines

49. Accumulator is provided for
(a) storing of liquid refrigerant (b) exchange of heat
(c) storing of unvaporized liquid (d) condensing gas

50. Oil separator if fitted in between
(a) condenser and evaporator (b) on the suction line
(c) compressor and condenser (d) at the receiver outlet

FACULTY I/C

HOD/MECH

Principal,
Knowledge Institute of Technology
Kakapalayam (Po), Salem-637 504

KNOWLEDGE INSTITUTE OF TECHNOLOGY					
DEPARTMENT OF MECHANICAL ENGINEERING					
IAPMO-India – KIOT, Centre of Excellence					
Subject Name	Ducting Design for all air HVAC system				
Name of the Student	Kavin T				
Register No	611215114083				
Date	4/9/2018	Duration	60 Minutes	Max.Marks	50
Faculty Name	Marks Awarded				
Faculty Signature	38		THIRTY EIGHT		

ANSWER ALL THE QUESTIONS-(50X01=50)

1. What is the symbol for impedance?
   a. R b. I c. Z d. P
2. The safety ground conductor for A/C circuit is usually color coded _____.
   a. red b. green c. black d. white
3. Heat which causes a change in temperature of a substance is called:
   a. latent heat. b. sensible heat. c. superheat. d. regular heat.
4. What is heat, which causes a change in the state of a material without a change in temperature, called?
   a. Latent heat b. Sensible heat c. Superheat d. Regular heat
5. What is a sling psychrometer used to measure?
   a. Latent heat b. Super heat c. Wet and dry bulb temperature d. Barometric pressure
6. A compressor is operating with a discharge pressure of 235.3 psig and a suction pressure of 35.3 psig. What is the compression ratio (pumping ratio)?
   a. 10:1 b. 8:1 c. 7:1 d. 5:1
7. In a (direct expansion) evaporator, liquid refrigerant must boil away as close to the end of the coil as possible in order to:
   a. ensure proper oil return. b. ensure that frost does not accumulate.
   c. sub-cool the compressor. d. operate at high efficiency.
8. An thermal expansion valve that is stuck wide open will cause _____.
   a. low suction pressure b. a flooded evaporator
   c. excessive superheat d. a starved evaporator
9. What is the major difference between a heat pump and an air conditioner?
   a. Condenser b. Thermostatic expansion valve
   c. Evaporator d. Reversing valve
10. What device controls the supplementary electric heat according to the outdoor temperature?
    a. Auxiliary temperature controlb. Outdoor auxiliary thermostat
    c. Outdoor ambient thermostat d. Indoor thermostat only
11. Which of the following is not a factor that should be considered when installing an outdoor unit?
    a. Return air b. Wind factors c. Sound transmission d. Snow fall
12. What is the minimum clearance for access panels on an outdoor condensing unit?
    a. 36 inches b. 30 inches c. 15 inches d. 10 inches
13. One BTU is the amount of heat required to raise the temperature of:
    a. one pound of ice one-degree Fahrenheit. b. one pound of water one-degree Fahrenheit.
    c. one gallon of water one-degree Fahrenheit. d. one gallon of water eight degrees Fahrenheit.
14. what is the primary composition of natural gas?
    a. 65 percent methane b. 75 percent methane c. 85 percent methane d. 95 percent methane
15. The electric heat element is usually made of what material?
    a. Copper with a brass coating b. Nickel with a cadmium coating
    c. Nickel and steel d. Nickel and chromium
16. Which of the following is an example of a resistive load?
    a. Bimetal switch b. Crankcase heater c. Transformer d. Motor
17. An oversized heating and cooling system can cause which of the following?
    a. Operating cost and relative humidity in the structure will decrease significantly.
    b. Moisture damage to a furnace heat exchanger and inadequate humidity removal during cooling cycles.

Principal,
Knowledge Institute of Technology
Kakkapalayam (Po), Salem-637 504

c. The structure will develop low humidity levels in the cooling season and high humidity in the winter.

d. Equipment will last longer and require less energy to operate due to the shorter run time.

18. When the temperatures of a structure both inside and outside are equal, there is _____.
a. no heat transfer b. latent heat transfer to the outside
c. thermal heat transfer of sensible heat d. a lower rate of relative humidity

19. Polyolester (POE) oils stored in plastic containers will _____.
a. separate b. become more alkaline
c. become acidic d. absorb moisture through the plastic

20. R-407C has _____.
a. a foul odor b. to be charged in the vapor phase
c. the ability to fractionate d. no temperature glide

21. What is a carbon footprint?
a. The carbon deposits from burning gasoline.
b. The amount of carbon dioxide that is produced to support your lifestyle.
c. The amount of carbon in the atmosphere produced by the world's lifestyle.
d. The amount of carbon in the stratosphere.

22. What is energy management?
a. A rule that the total amount of energy stays constant in an isolated system over time.
b. Recovering energy lost while using mechanical equipment.
c. Reading the electric and fuel gas meters every month.
d. The monitoring and controlling of energy consuming devices.

23. The function of duct in air conditioning unit is:
(a) air cooling (b) air cleaning (c) air drying (d) air distribution

24. Process of changing solid into vapour state without passing through liquid state is:
(a) super heating (b) sublimation (c) subcooling (d) triple point

25. -Amount of heat required to raise the temperature of one unit of substance through 1 degree is called:
(a) C.H.U. (b) B.T.U. (c) Calorie (d) Specific heat

26. The COP of a domestic air conditioning in comparison to domestic refrigerator will be:
(a) same (b) less (c) more (d) depends upon weather conditions

27. Solenoid valve is operated:
(a) electrically (b) by hand (c) by gas pressure (d) by oil pressure

28. Subcooling is a process of cooling the refrigerant in vapour compression refrigeration system before:
(a) evaporation (b) throttling (c) condensation (d) compression

29. Pump down the system for:
(a) more cooling effect (b) to check compressor efficiency
(c) gas charging (d) to attend maintenance in low side

30. A thermostatic expansion valve function with
(a) suction pressure (b) discharge pressure
(c) discharge temperature (d) suction temperature

31. The colour of the flame of halide torch in case of leakage of Freon refrigerant will change t:
(a) purple (b) pink (c) bright green (d) blue

32. Liquid charged in thermostatic expansion valves sensing bulb is:
(a) alcohol (b) same refrigerant (c) mercury (d) nitrogen

33. The oil used with 134A refrigerant is:
(a) mineral oil (b) capilla d (c) polyol ester oil (d) lubricating oil

34. 26-The difference between DBT and WBT is called:
(a) wet bulb depression (b) dew point depression
(c) effective temperature (d) adiabatic saturation temperature

35. 27-A device which is used to find relative humidity:
(a) pyrometer (b) anemometer (c) hydrometer (d) hygrometer

36. Which type of valve is used in a reciprocating refrigeration compressor?
(a) rotary valve (b) poppet valve (c) ring plate (d) glob valve

37. The capacity of visible cooler is expressed in:
(a) cubic feet (b) litres (c) k.cal/tr (d) tons of refrigeration

38. Chemical name of Freon 22 is
(a) dichloro difluoro methane (b) monochloro difluoro methane

Principal,
Knowledge Institute of Technology
Kalavam (Po), Salem-637 504

(c) trichloro monofluoro methane (d) dichloro monofluoro methane

39. Which of the following refrigerant has the lowest boiling point?
(a) carbon dioxide (b) ammonia (c) hydrogen (d) freon 12

40. Auto defrost is operated by
(a) evaporator fan (b) thermostat (c) timer watch (d) heating element

41. The absolute zero temperature corresponds on the condition when
(a) all the substances exit only as solids (b) volume of a gas reduces to zero
(c) kinetic energy of gas molecules becomes zero (d) no pressure is exerted by the gas

42. Sum of atmospheric pressure and gauge pressure is called
(a) total pressure (b) absolute pressure (c) normal pressure (d) natural pressure

43. The effectiveness of the cooling tower is dependent on:
(a) dry bulb temperature of the air (b) direction of the flow of air
(c) wet bulb temperature of the air (d) none of the above

44. One micron of vaccum is equal to
(a) 0.1 mm hg (b) 0.01 mm hg (c) 0.001 mm hg (d) 0.0001 mm hg

45. In a flooded evaporator which of the following types of expansion device is employed?
(a) float valve (b) capillary tube
(c) automatic expansion valve (d) thermostatic expansion valve

46. In a thermal electric expansion valve which senses the suction temperature is
(a) transformer (b) thermister (c) thermostat (d) rheostat

47. 40-The specific humidity is the mass of water vapour present in
(a) 1 kg of dry air (b) 1 m3 of dry air (c) 1 m3 of wet air (d) 1 kg of wet air

48. In psychrometric chart, specific humidity lines are:
(a) vertical (b) horizontal (c) inclined (d) curved lines

49. Accumulator is provided for
(a) storing of liquid refrigerant (b) exchange of heat
(c) storing of unvaporized liquid (d) condensing gas

50. Oil separator if fitted in between
(a) condenser and evaporator (b) on the suction line
(c) compressor and condenser (d) at the receiver outlet

FACULTY I/C **HOD/MECH**

Principal,
Knowledge Institute of Technology
Kanjalayam (Po), Salem-637 504

KNOWLEDGE INSTITUTE OF TECHNOLOGY, SALEM-637504

DEPARTMENT OF MECHANICAL ENGINEERING

CENTER FOR HEATING VENTILATION AND AIR CONDITIONING

BATCH- (2015-2019) AY: 2018-19

Ducting Design for all Air HVAC System – Mark Statement **Max.Marks:50**

Year/Sem: IV / VII **Date:07.09.2018**

S.No.	Register Number	Student Name	Mark Secured	Result Status
1.	611215114001	ABISHEK HUSSAIN J	36	PASS
2.	611215114002	ABISHIEK B	37	PASS
3.	611215114003	ADITHYA R	41	PASS
4.	611215114004	ADITYA R	30	PASS
5.	611215114011	ARULBALAJI S	29	PASS
6.	611215114013	ARUNACHALAM K	36	PASS
7.	611215114014	ARUNKUMAR P	41	PASS
8.	611215114016	ASIK RAM K P	28	PASS
9.	611215114027	CHANDRAPRAKASH K	27	PASS
10.	611215114039	DINESH.P	32	PASS
11.	611215114046	GOKUL S	31	PASS
12.	611215114048	GOKULRAJ S	35	PASS
13.	611215114050	GOPIKANNAN R	45	PASS
14.	611215114051	GOVINDARAJ S	40	PASS
15.	611215114079	KARTHIKEYAN M	36	PASS
16.	611215114083	KAVIN T	38	PASS
17.	611215114089	KESAVANATHAN B	31	PASS
18.	611215114091	KIRUBA S	45	PASS
19.	611215114092	KISHORE K	41	PASS
20.	611215114093	LINGESH K	30	PASS
21.	611215114094	LOGANADHAN R	29	PASS
22.	611215114095	LOGESH J	28	PASS
23.	611215114096	LOGESH M	27	PASS
24.	611215114097	LOGESHWARAN S	32	PASS
25.	611215114098	MADHANKUMAR C	30	PASS
26.	611215114099	MADHAVANATH J M	35	PASS
27.	611215114103	MANIKANDAN S	45	PASS
28.	611215114104	MANISHKUMAR K	32	PASS
29.	611215114105	MANO K	30	PASS
30.	611215114108	MANOJ KUMAR S	35	PASS
31.	611215114116	MOHAN A K	33	PASS
32.	611215114119	MOHANKUMAR R	36	PASS
33.	611215114121	MOHAN KUMAR A P	36	PASS
34.	611215114123	MUGUNTHA ADITYA R	38	PASS
35.	611215114124	MURALI R	41	PASS
36.	611215114128	MUTHUKUMAR S	29	PASS
37.	611215114136	NIRMAL S	28	PASS
38.	611215114146	POTHIGAI SELVAN M	27	PASS
39.	611215114192	SATHISH KUMAR C	27	PASS
40.	611215114206	SRIRAM N	32	PASS
41.	611215114218	TAMILSELVAN S	30	PASS
42.	611215114244	WINSLETVASANTHRAAJ T S	35	PASS
43.	611215114341	VENKATESHWARAN M	45	PASS

Note: Minimum 25 marks will be considered as pass mark for this certification course.

07/09/2018

FACULTY I/C **HOD/MECH** **PRINCIPAL**

Principal,
Knowledge Institute of Technology
Kakapalayam (Po), Salem-637 504

KNOWLEDGE INSTITUTE OF TECHNOLOGY, SALEM
Department of Mechanical Engineering

FEEDBACK FORM
CERTIFICATION COURSE (HVAC)

Academic Year: 2018-19 Date: 31/08/2018

		Strongly agree	Agree	Neutral	Disagree	Strongly disagree
1	About Teaching Methodology			✓		
2	About training handled by faculty		✓			
3	About Practical Session		✓			
4	About Industries Practice				✓	
5	Knowledge Beyond the syllabus	✓				
6	Overall Experience about this course		✓			

Suggestion for Improvement:

- Need more industries practice.

Student Signature: [ABISHEK.B]

Principal,
Knowledge Institute of Technology
Kanjikovil (Po), Salem-637 504

KNOWLEDGE INSTITUTE OF TECHNOLOGY, SALEM
Department of Mechanical Engineering

FEEDBACK FORM
CERTIFICATION COURSE (HVAC)

Academic Year: 2018-19 Date: 31/08/2018

		Strongly agree	Agree	Neutral	Disagree	Strongly disagree
1	About Teaching Methodology			✓		
2	About training handled by faculty		✓			
3	About Practical Session		✓			
4	About Industries Practice			✓		
5	Knowledge Beyond the syllabus		✓			
6	Overall Experience about this course			✓		

Suggestion for Improvement:

- Industrial visit is need.
- live time practical session is need.

Student Signature: R. Murali (murali R)

Principal,
Knowledge Institute of Technology
Kakapalayam (Po), Salem-637 504

KNOWLEDGE INSTITUTE OF TECHNOLOGY, SALEM
Department of Mechanical Engineering

FEEDBACK FORM
CERTIFICATION COURSE (HVAC)

Academic Year: 2018-19 Date: 31-08-2018

		Strongly agree	Agree	Neutral	Disagree	Strongly disagree
1	About Teaching Methodology		✓			
2	About training handled by faculty			✓		
3	About Practical Session			✓		
4	About Industries Practice			✓		
5	Knowledge Beyond the syllabus		✓			
6	Overall Experience about this course		✓			

Suggestion for Improvement:

⇒ Need Live Practical Sessions

Student Signature:	Venkatesh M (M.VENKATESHWARAN)

Principal,
Knowledge Institute of Technology
Kanjaikovil (Po), Salem-637 504

KNOWLEDGE INSTITUTE OF TECHNOLOGY, SALEM
Department of Mechanical Engineering

FEEDBACK FORM
CERTIFICATION COURSE (HVAC)

Academic Year: 2018-19 Date: 31/8/2018

		Strongly agree	Agree	Neutral	Disagree	Strongly disagree
1	About Teaching Methodology	✓				
2	About training handled by faculty		✓			
3	About Practical Session		✓			
4	About Industries Practice	✓				
5	Knowledge Beyond the syllabus	✓				
6	Overall Experience about this course		✓			

Suggestion for Improvement:

* Need more industrial visits.
* Need more practical sessions.

Student Signature:	Dinesh (Dinesh.P).

Principal,
Knowledge Institute of Technolog
Kakapalayam (Po), Salem-637

KNOWLEDGE INSTITUTE OF TECHNOLOGY, SALEM
Department of Mechanical Engineering

FEEDBACK FORM
CERTIFICATION COURSE (HVAC)

Academic Year: 2018-19

Date: 31/8/2018

		Strongly agree	Agree	Neutral	Disagree	Strongly disagree
1	About Teaching Methodology		✓			
2	About training handled by faculty			✓		
3	About Practical Session		✓			
4	About Industries Practice		✓			
5	Knowledge Beyond the syllabus			✓		
6	Overall Experience about this course			✓		

Suggestion for Improvement:

More industrial experience was needed.
Improve handling faculty. Teaching.

Student Signature: KavinT (KavinT)

Principal,
Knowledge Institute of Technology
Kakapalayam (Po), Salem-637 504

IAPMO-INDIA & KNOWLEDGE INSTITUTE OF TECHNOLOGY

DEPARTMENT OF MECHANICAL ENGINEERING

Certificate of Completion

This certificate is awarded to

ARUNKUMAR P (611215114014)

In recognition of sucessful completion of

"*Ducting Design for all Air HVAC System*"

Conducted by "IIK-Center" from 09.08.2018 to 31.08.2018 Department of Mechanical Engineering, Knowledge Institute of Technology salem, Tamilnadu, India.

Principal,
Knowledge Institute of Technology
...alavam (Po), Salem-637 504

HOD/Mech

Principal

IAPMO-INDIA & KNOWLEDGE INSTITUTE OF TECHNOLOGY

DEPARTMENT OF MECHANICAL ENGINEERING

Certificate of Completion

This certificate is awarded to

GOVINDARAJ S (611215114051)

In recognition of sucessful completion of

"*Ducting Design for all Air HVAC System*"

Conducted by "IIK-Center" from 09.08.2018 to 31.08.2018 Department of Mechanical Engineering, Knowledge Institute of Technology salem, Tamilnadu, India.

HOD/Mech

Principal,
Knowledge Institute of Technology
Kanalavam (Po), Salem-637 50

Principal

IAPMO-INDIA & KNOWLEDGE INSTITUTE OF TECHNOLOGY

DEPARTMENT OF MECHANICAL ENGINEERING

Certificate of Completion

This certificate is awarded to

KIRUBA S (611215114091)

In recognition of sucessful completion of

"*Ducting Design for all Air HVAC System*"

Conducted by "IIK-Center" from 09.08.2018 to 31.08.2018 Department of Mechanical Engineering, Knowledge Institute of Technology salem, Tamilnadu, India.

HOD/Mech

Principal,
Knowledge Institute of Technology
...alayam (Po), Salem-637 50...

Principal

IAPMO-INDIA & KNOWLEDGE INSTITUTE OF TECHNOLOGY

DEPARTMENT OF MECHANICAL ENGINEERING

Certificate of Completion

This certificate is awarded to

MURALI R (611215114124)

In recognition of sucessful completion of

"*Ducting Design for all Air HVAC System*"

Conducted by "IIK-Center" from 09.08.2018 to 31.08.2018 Department of Mechanical Engineering, Knowledge Institute of Technology salem, Tamilnadu, India.

HOD/Mech

Principal,
Knowledge Institute of Technology
Kakapalayam (Po), Salem-637 504

Principal

IAPMO-INDIA & KNOWLEDGE INSTITUTE OF TECHNOLOGY

DEPARTMENT OF MECHANICAL ENGINEERING

Certificate of Completion

This certificate is awarded to

SATHISHKUMAR C (611215114192)

In recognition of sucessful completion of

"*Ducting Design for all Air HVAC System*"

Conducted by "IIK-Center" from 09.08.2018 to 31.08.2018 Department of Mechanical Engineering, Knowledge Institute of Technology salem, Tamilnadu, India.

HOD/Mech

Principal,
Knowledge Institute of Technology
Kakapalayam (Po), Salem-637 50

Principal

KNOWLEDGE INSTITUTE OF TECHNOLOGY, SALEM-637504

DEPARTMENT OF MECHANICAL ENGINEERING

REPORT OF THE EVENT (Module:1)

Date	:	03.09.2018 to 25.09.2018	**Resource person**	:	**Mr.S.Surendar** Assistant Professor, Department of Mechanical Engineering, Knowledge Institute of Technology
Time & Duration	:	05.00 pm to 07.00 pm & 30 Hours	**Title**	:	**Design of Practical HVAC System**
Venue	:	A 310, KIOT	**No. of Participants**	:	42

1. He discussed about Fundamental and scope of HVAC system.
2. He explained about Psychometric process, Classification of Air-Conditioning System.
3. Also he explained about Component of A/C, Sub systems in AC.

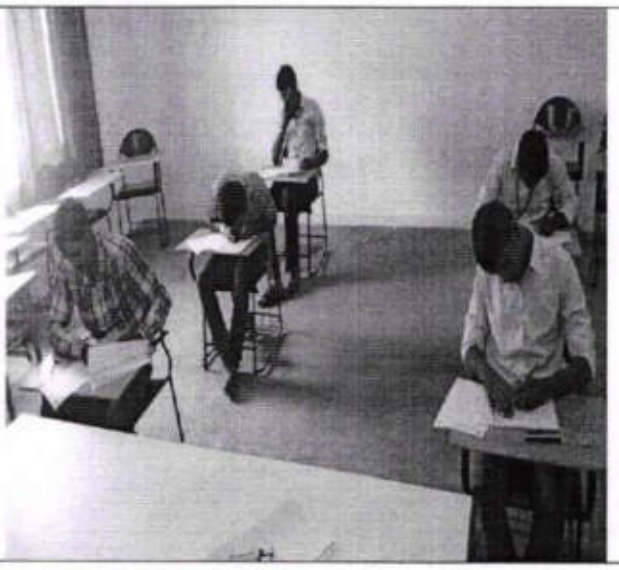

Encl: Circular / Brochure / Attendance Sheet

Principal,
Knowledge Institute of Technology
Kakapalayam (Po), Salem-637 504

From

S.Surendar,
Assistant Professor,
Department of Mechanical Engineering,
Knowledge Institute of Technology,
Salem.

To

The Principal,
Knowledge Institute of Technology,
Salem. .

Through: Head of the Department, Department of Mechanical Engineering

Respected Sir,

Sub: Design of Practical HVAC System –regarding

We have planned to conduct, HVAC Training on **Design of Practical HVAC System** from 03.09.2018 for final year mechanical engineering students through IIK (IAPMO-India-KIOT) center in this Academic Year (2018-2019).In this regard, I request your permission to execute the certification course for final year Mechanical Engineering students.

Encl: Name list of shortlisted students.

Thanking You

Place: Salem

Date:29.08.2018

Yours Faithfully

29/08/2018
S.Surendar AP/Mech

(HOD / MECH)

Principal,
Knowledge Institute of Technology
Kakapalayam (Po), Salem-637 504

KNOWLEDGE INSTITUTE OF TECHNOLOGY, SALEM - 637 504

CIRCULAR

Circular No.	KIOT/MECH/IAPMO/2018-19/03	**Date**	29.08.2018
To	All Faculty & Third year students of Mechanical Engineering		
Subject	**Design of Practical HVAC System** - IAPMO - Certification Course - Reg.		
Circular issued by	IIK (IAPMO-India-KIOT) center		

We have planned to conduct, HVAC Training on **Design of Practical HVAC System** from 03.09.2018 for Final year Mechanical Engineering students through IIK (IAPMO-India-KIOT) center in this Academic Year (2018-2019).

Venue: A310

Time: 05.00pm to 07.00pm

Encl: Name list of shortlisted students.

SENDER		PRINCIPAL

MECH	VP Office	CIVIL	EEE	ECE	CSE	S&H	PD	LIB	EMS	AO	Transport I/C	Hostel NB	Director / Training	Director / Placement	Residential Warden		College NB	Office / File	Class Circulation	Security Office	KBS	Reception
															LH	GH						
*	*	*	*	*	*	*	*						*	*				*	*			

Checked by Principal office I/C		Verified by the sender	

File :

1) Principal Office :
2) Concerned issuing department :

Principal,
Knowledge Institute of Technology
Kakapalayam (Po), Salem-637 504

KNOWLEDGE INSTITUTE OF TECHNOLOGY, SALEM-637504

DEPARTMENT OF MECHANICAL ENGINEERING

CENTER FOR HEATING VENTILATION AND AIR CONDITIONING

BATCH- (2016 - 20) AY: 2018-19

Design of Practical HVAC System – Mark Statement

Year/Sem: III / V

Date:29.08.2018

S.No.	Register Number	Student Name	Remarks
1.	611216114009	BASKAR N	
2.	611216114012	BLESSY JEYAPAULINE J	
3.	611216114015	DEEPAK KUMAR V M	
4.	611216114016	DEVAKRISHNA K	
5.	611216114020	DHUKILAN S	
6.	611216114021	DHYANESHKANNA R	
7.	611216114024	DINAKARAN S	
8.	611216114028	DINESHKUMAR T	
9.	611216114030	DIVAKAR P	
10.	611216114038	GOKULNATH S	
11.	611216114040	GOKULRAJ P	
12.	611216114049	HARISH B	
13.	611216114050	HARI VENKATESH Y	
14.	611216114053	JAWAHARBALAJI S	
15.	611216114054	JEEVARAJAN M	
16.	611216114055	JOSHUA JACOB S	
17.	611216114057	KARTHICK M	
18.	611216114058	KARTHICK R	
19.	611216114060	KARTHICK RAJA K	
20.	611216114061	KARTHIKEYAN M	
21.	611216114062	KARTHIKEYAN S	
22.	611216114063	KARTHIKRAJA A	
23.	611216114064	KATHIRVEL C	
24.	611216114069	KISHOR KUMAR K	
25.	611216114075	MANISOWDESVAR J	
26.	611216114092	NAVEENPRAKASH S	
27.	611216114098	PAUL SIMON THEKKANATH	
28.	611216114100	PAVITHRAN K	
29.	611216114101	POOVENTHAN J	
30.	611216114102	PRADEEP S	
31.	611216114105	PRAKASH T	
32.	611216114108	PRASANTH D	
33.	611216114111	PRAVEEN M E	
34.	611216114128	SAIGIRISH O E	
35.	611216114129	SAKTHI M	
36.	611216114172	VINOTH KUMAR K	
37.	611216114308	DINESH KUMAR P	
38.	611216114321	HARI SURYA S	
39.	611216114331	NAGAPPAN N	
40.	611216114346	SELLADURAI R	
41.	611216114351	SURENTHAR R	
42.	611216114359	VISWAJITH S	

FACULTY I/C

HOD/MECH

PRINCIPAL

Principal,
Knowledge Institute of Technology
Kakapalayam (Po), Salem-637 504

KNOWLEDGE INSTITUTE OF TECHNOLOGY
Department of Mechanical Engineering

A.Y: 2018-19 | **Course Plan** (2020 Batch) | Date: 31.08.2018

Name of the COE:		IAPMO-India – KIOT, Centre of Excellence		
Name of the Course:		HVAC Design and Project Installation Engineer	Semester	05 & 06
Name of the Module	**Topics to be covered**	**Faculty Name**	**Number of Hours**	**Faculty Signature**
Design of Practical HVAC System	Fundamental and scope of HVAC, Mode of heat transfer, Standards, Refrigeration cycle, Component of A/C, Refrigerants and types, Study of AC system, Study of Psychrometric, Classification of Air-Conditioning System & Sub systems in AC.	Mr.S.Surendar & Mr.S.M.Gowtham	30	
Components sizing and selection for chilled water type HVAC system	Orientation of Building, To Read Latitude & Location of building, Difference for wall, glass, Roof and Partition, Cooling and Heat Load Calculation, Calculation of sensible Heat Factor ADP and Dehumidified CFM, Cooling Load Calculation, Chilled water system & Equipment Selection	Mr.S.Rajesh & Mr.J.Ramesh	30	
		Total No.of Hours	60	

Detailed Execution Plan

Name of the Course Module: 1. Design of Practical HVAC System

Duration: 30 hours

Module No.	Name of the Module	Teaching Hours	Practical Hours	Self-Study Hours	Course Plan (Day wise)
1.1	Fundamental and scope of HVAC	2	-	-	Day 1
1.2	Mode of heat transfer	2	-	-	Day 2
1.3	Mode of heat transfer	1	-	1	Day 3
1.4	Refrigeration cycle	2	-	-	Day 4
1.5	Refrigeration cycle	1	-	1	Day 5
1.6	Component of A/C	2	-	-	Day 6
1.7	Refrigerants and types	2	-	-	Day 7

Principal,
Knowledge Institute of Technology
Kakapalayam (Po), Salem-637 504

1.8	Study of AC system	2	-	-	Day 8
1.9	Study of Psychrometric	2	-	-	Day 9
1.10	Study of Psychrometric	2	-	-	Day 10
1.11	Study of Psychrometric	1	-	1	Day 11
1.12	Classification of Air-Conditioning System	2	-	-	Day 12
1.13	Classification of Air-Conditioning System	2	-	-	Day 13
1.14	Classification of Air-Conditioning System	2	-	-	Day 14
1.15	Sub systems in AC	2	-	-	Day 15

Detailed Execution Plan

Name of the Course Module: 2. Components sizing and selection for chilled water type HVAC system

Duration: 30 hours

Module No.	Name of the Module	Teaching Hours	Practical Hours	Self-Study Hours	Course Plan (Day wise)
2.1	Air terminal selection	2	-	-	Day 1
2.2	Air terminal selection	1	-	1	Day 2
2.3	Cold storage selection	2	-	-	Day 3
2.4	Cold storage selection	1	-	1	Day 4
2.5	Selection of Materials of Ducts	2	-	-	Day 5
2.6	Selection of Materials of Ducts	1	-	1	Day 6
2.7	Primary and secondary pump selections	2	-	-	Day 7
2.8	Selection of cooling tower	2	-	-	Day 8
2.9	Selection of cooling tower	1	-	1	Day 9
2.10	Selection of Chillers	2	-	-	Day 10
2.11	Selection of Chillers	1	-	1	Day 11
2.12	AHU and FCU classification and selection	2	-	-	Day 12
2.13	Selection of Fan/Blower RPM	2	-	-	Day 13
2.14	Chilled water system & Equipment Selection	2	-	-	Day 14
2.15	Selection of Motor HP	2	-	-	Day 15

FACULTY I/C HOD/MECH PRINCIPAL

Principal,
Knowledge Institute of Technology
Kakapalayam (Po), Salem-637 504

KNOWI ''GE INSTITUTE OF TECHNOLOGY, SALF '-637504

DEPARTMENT OF MECHANICAL ENGINEERING

CENTER FOR HEATING VENTILATION AND AIR CONDITIONING

BATCH-2016-20 / **Design of Practical HVAC System** / Academic Year/ SEM: 2018-19 / ODD Date: 25-09-2018

S.No	Reg.No	Name of the student	Year / Sem	03. 09. 2018	04. 09. 2018	05. 09. 2018	06. 09. 2018	07. 09. 2018	10. 09. 2018	11. 09. 2018	12. 09. 2018	14. 09. 2018	17. 09. 2018	18. 09. 2018	19. 09. 2018	20. 09. 2018	24. 09. 2018	25. 09. 2018
1.	611216114009	BASKAR N	III / V	/	/	/	/	/	/	/	/	/	/	/	/	/	/	/
2.	611216114012	BLESSY JEYAPAULINE J	III / V	/	/	/	/	/	/	/	/	/	/	/	/	/	/	/
3.	611216114015	DEEPAK KUMAR V M	III / V	/	/	/	/	/	/	/	/	/	/	/	/	/	/	/
4.	611216114016	DEVAKRISHNA K	III / V	/	/	/	/	/	/	/	/	/	/	/	/	/	/	/
5.	611216114020	DHUKILAN S	III / V	/	/	/	/	/	/	/	/	/	/	/	/	/	/	/
6.	611216114021	DHYANESHKANNA R	III / V	/	/	/	/	/	/	/	/	/	/	/	/	/	/	/
7.	611216114024	DINAKARAN S	III / V	/	/	/	/	/	/	/	a	/	/	/	/	/	/	/
8.	611216114028	DINESHKUMAR T	III / V	/	/	/	/	/	/	/	/	/	/	/	/	/	/	/
9.	611216114030	DIVAKAR P	III / V	/	/	/	/	/	/	/	/	/	/	/	/	/	/	/
10.	611216114038	GOKULNATH S	III / V	/	/	/	/	/	/	/	/	/	/	/	/	/	/	/
11.	611216114040	GOKULRAJ P	III / V	/	/	/	/	/	/	/	/	/	/	/	/	/	/	/
12.	611216114049	HARISH B	III / V	/	/	/	a	/	/	/	/	/	/	/	/	/	/	/
13.	611216114050	HARI VENKATESH Y	III / V	/	/	/	/	/	/	/	/	/	/	/	/	/	/	/
14.	611216114053	JAWAHARBALAJI S	III / V	/	/	/	/	/	/	/	/	/	/	/	/	/	/	/
15.	611216114054	JEEVARAJAN M	III / V	/	/	/	/	/	/	/	/	/	/	/	/	/	a	/
16.	611216114055	JOSHUA JACOB S	III / V	/	/	/	/	/	/	/	/	/	/	/	/	/	/	/
17.	611216114057	KARTHICK M	III / V	/	/	/	/	/	/	/	/	/	/	/	/	/	/	/
18.	611216114058	KARTHICK R	III / V	/	/	/	/	/	/	/	/	/	/	/	/	/	/	/
19.	611216114060	KARTHICK RAJA K	III / V	/	a	/	/	/	/	/	/	/	/	/	/	/	/	/
20.	611216114061	KARTHIKEYAN M	III / V	/	/	/	/	/	/	/	/	/	/	/	/	/	/	/
21.	611216114062	KARTHIKEYAN S	III / V	/	/	/	/	/	/	/	/	/	/	/	/	/	/	/
22.	611216114063	KARTHIKRAJA A	III / V	/	/	/	/	/	/	/	/	/	/	/	/	/	/	/

Principal
Knowledge Institute of Technology
Kakapalayam (Po), Salem-637 504

23.	611216114064	KATHIRVEL C	III / V																	
24.	611216114069	KISHOR KUMAR K	III / V																	
25.	611216114075	MANISOWDESVAR J	III / V																	
26.	611216114092	NAVEENPRAKASH S	III / V																	
27.	611216114098	PAUL SIMON THEKKANATH	III / V																	
28.	611216114100	PAVITHRAN K	III / V																	
29.	611216114101	POOVENTHAN J	III / V																	
30.	611216114102	PRADEEP S	III / V																	
31.	611216114105	PRAKASH T	III / V																	
32.	611216114108	PRASANTH D	III / V																	
33.	611216114111	PRAVEEN M E	III / V																	
34.	611216114128	SAIGIRISH O E	III / V																	
35.	611216114129	SAKTHI M	III / V																	
36.	611216114172	VINOTH KUMAR K	III / V																	
37.	611216114308	DINESH KUMAR P	III / V																	
38.	611216114321	HARI SURYA S	III / V																	
39.	611216114331	NAGAPPAN N	III / V																	
40.	611216114346	SELLADURAI R	III / V																	
41.	611216114351	SURENTHAR R	III / V																	
42.	611216114359	VISWAJITH S	III / V																	
		No. of Students Present		41	41	42	41	42	41	42	41	42	41	42	42	42	40	42		
		No. of Students Absent		01	01	NIL	01	NIL	01	NIL	01	NIL	01	NIL	NIL	NIL	02	NIL		
		Faculty Signature																		

FACULTY I/C

HoD/MECH

PRINCIPAL

Principal,
Knowledge Institute of Technology
Kakapalayam (Po), Salem-637 504

KNOWLEDGE INSTITUTE OF TECHNOLOGY					
DEPARTMENT OF MECHANICAL ENGINEERING					
IAPMO-India – KIOT, Centre of Excellence					
Subject Name	Design of Practical HVAC System				
Name of the Student	Harish. B				
Register No	811216114049				
Date	01/10/2018	Duration	60 Minutes	Max.Marks	50
Faculty Name	Marks Awarded				
Faculty Signature	38		THREE EIGHT		

ANSWER ALL THE QUESTIONS-(50X01=50)

1. Freon group of refrigerants are
(A) Inflammable (B) Toxic (C) Non-inflammable and toxic (D) Nontoxic and non-inflammable
2. The boiling point of ammonia is
(A) -10.5°C (B) -30°C (C) -33.3°C (D) -77.7°C
3. For obtaining high COP, the pressure range of compressor should be
(A) High (B) Low (C) Optimum (D) Any value
4. A reversible engine has ideal thermal efficiency of 30%. When it is used as a refrigerating machine with all other conditions unchanged, the coefficient of performance will be
(A) 1.33 (B) 2.33 (C) 3.33 (D) 4.33
5. Cooling water is required for following equipment in ammonia absorption plant
(A) Condenser (B) Evaporator (C) Absorber (D) Condenser, absorber and separator (rectifier)
6. The freezing point of sulphur dioxide is
(A) -56.6°C (B) -75.2°C (C) -77.7°C (D) -135.8°C
7. Mass flow ratio of NH_3 in comparison to Freon-12 for same refrigeration load and same temperature limits is of the order of
(A) 1: 1 (B) 1: 9 (C) 9: 1 (D) 1: 3
8. In a refrigeration system, the expansion device is connected between the
(A) Compressor and condenser (B) Condenser and receiver (C) Receiver and evaporator
(D) Evaporator and compressor
9. The vapour compression refrigerator employs the following cycle
(A) Rankine (B) Carnot (C) Reversed Rankine (D) Reversed Carnot
10. In actual air-conditioning applications for R-12 and R-22, and operating at a condenser temperature of 40° C and an evaporator temperature of 5° C, the heat rejection factor is about
(A) 1 (B) 1.25 (C) 2.15 (D) 5.12
11. Rating of a domestic refrigerator is of the order of
(A) 0.1 ton (B) 5 tons (C) 10 tons (D) 40 tons
12. A human body feels comfortable when the heat produced by the metabolism of human body is equal to the
(A) Heat dissipated to the surroundings (B) Heat stored in the human body
(C) Sum of (A) and (B) (D) Difference of (A) and (B)
13. The bank of tubes at the back of domestic refrigerator is
(A) Condenser tubes (B) Evaporator tubes (C) Refrigerant cooling tubes (D) Capillary tubes
14. In a lithium bromide absorption refrigeration system
(A) Lithium bromide is used as a refrigerant and water as an absorbent
(B) Water is used as a refrigerant and lithium bromide as an absorbent
(C) Ammonia is used as a refrigerant and lithium bromide as an absorbent
(D) None of the above
15. The condition of refrigerant after passing through the condenser in a vapour compression system is
(A) Saturated liquid (B) Wet vapour (C) Dry saturated vapour (D) Superheated vapour
16. Unit of thermal conductivity in M.K.S. units is
(A) K cal/kg m² °C (B) K cal m/hr m² °C (C) K cal/hr m² °C (D) K calm/hr °C
17. Thermal diffusivity is a

Principal,
Knowledge Institute of Technology
Kaoalayam (Po), Salem-637 504

(A) Function of temperature (B) Physical property of a substance
(C) Dimensionless parameter (D) All of these

18. Unit of thermal conductivity in S.I. units is
(A) J/m² sec (B) J/m °K sec (C) W/m °K (D) Option (B) and (C) above.

19. Which of the following statement is wrong?
(A) The heat transfer in liquid and gases takes place according to convection
(B) The amount of heat flow through a body is dependent upon the material of the body
(C) The thermal conductivity of solid metals increases with rise in temperature
(D) Logarithmic mean temperature difference is not equal to the arithmetic mean temperature difference

20. Thermal conductivity of solid metals with rise in temperature normally
(A) Increases (B) Decreases (C) Remain constant (D) May increase or decrease depending on temperature

21. In free convection heat transfer transition from laminar to turbulent flow is governed by the critical value of the
(A) Reynold's number (B) Grashoff's number (C) Reynold's number, Grashoff's number
(D) Prandtl number, Grashoff's number

22. Thermal conductivity of non-metallic amorphous solids with decrease in temperature
(A) Increases (B) Decreases (C) Remain constant (D) May increase or decrease depending on temperature

23. According to Dalton's law of partial pressures, (where pb = Barometric pressure, pa = Partial pressure of dry air, and pv = Partial pressure of water vapour)
(A) Pb = pa – pv (B) Pb = pa + pv (C) Pb = pa × pv (D) Pb = pa/pv

24. Heat transfer takes place as per
(A) Zeroth law of thermodynamics (B) First law of thermodynamics (C) Second law of thermodynamics (D) Kirchaffs Law

25. The heat transfer by conduction through a thick sphere is given by
(A) Q = 2πkr1 r2 (T1 - T2)/ (r2 - r1) (B) Q = 4πkr1 r2 (T1 - T2)/ (r2 - r1)
(C) Q = 6πkr1 r2 (T1 - T2)/ (r2 - r1) (D) Q = 8πkr1 r2 (T1 - T2)/ (r2 - r1)

26. When heat is transferred from one particle of hot body to another by actual motion of the heated particles, it is referred to as heat transfer by
(A) Conduction (B) Convection (C) Radiation (D) Conduction and convection

27. Fourier's law of heat conduction is (where Q = Amount of heat flow through the body in unit time, A = Surface area of heat flow, taken at right angles to the direction of heat flow, dT = Temperature difference on the two faces of the body, dx = Thickness of the body, through which the heat flows, taken along the direction of heat flow, and k = Thermal conductivity of the body)
(A) k. A. (dT/dx) (B) k. A. (dx/dT) (C) k. (dT/dx) (D) k. (dx/dT)

28. When heat is transferred from hot body to cold body, in a straight line, without affecting the intervening medium, it is referred as heat transfer by
(A) Conduction (B) Convection (C) Radiation (D) Conduction and convection

29. Reynolds number (RN) is given by (where h = Film coefficient, l = Linear dimension, V = Velocity of fluid, k = Thermal conductivity, t = Temperature, ρ = Density of fluid, cp = Specific heat at constant pressure, and μ = Coefficient of absolute viscosity)
(A) RN = hl/k (B) RN = μ cp/k (C) RN = ρ V l /μ (D) RN = V^2/t.cp

30. Sensible heat is the heat required to
(A) Change vapour into liquid (B) Change liquid into vapour
(C) Increase the temperature of a liquid of vapour (D) Convert water into steam and superheat it

31. Two locations where a cold air return should be installed:
(A) Open area of wall and low to the ground.
(B) Behind appliances and high on the wall.
(C) Open area of wall and high on the wall.
(D) Behind appliances and low to the ground.

32. Which of the following is a law of thermodynamics?
(A) Heat is a form of matter.
(B) Heat moves toward a place with higher intensity.
(C) Heat moves toward a place with lower intensity.

Principal,
Knowledge Institute of Technology
Kakapalayam (Po), Salem-637 504

(D)Heat moves toward a place with a higher temperature.

33. If 1 pound of water warms to 60 degrees F from 55 degrees F, what btu of latent heat will it have absorbed?

(A)25 (B)5 (C)10 (D)15

34. What is the amount of heat energy required to evaporate 1 pound of water?

(A)370 btu (B) 570 btu (C) 770 btu (D)970 btu

35. In an air conditioning and refrigeration system, what occurs in a condenser?

(A)The refrigerant absorbs the latent heat. (B)The refrigerant releases the latent heat.

(C)Latent heat is pressurized. (D)Latent heat is increased.

36. In Fahrenheit, the boiling point of water is _____.

(A)100 degrees (B)112 degrees (C)212 degrees (D)221 degrees

37. Ice exerts pressure _____.

(A)Upwards (B) Laterally (C) Downwards (D)In all directions

38. Pressure is usually measured in _____.

(A)Pounds per square foot (B) Pressure per square foot

(C)Pounds per square inch (D) Pressure per square inch

39. Vaporization can be increased by _____ the pressure on a liquid.

(A)Increasing (B) Equalizing (C) Reducing

40. Pressure on the high pressure side of a mechanical refrigeration unit is called _____.

(A)Suction pressure (B) Discharge or head pressure

(C) Differential l pressure (D) Absolute pressure

41. Dry bulb temperature is the temperature of air recorded by a thermometer, when

(A) It is not affected by the moisture present in the air

(B) Its bulb is surrounded by a wet cloth exposed to the air

(C) The moisture present in it begins to condense (D) None of the above

42. In refrigerators, the temperature difference between the evaporating refrigerant and the medium being cooled should be

(A) High, of the order of 25° (B) As low as possible (3 to 11°C) (C) Zero (D) Any value

43. The evaporator changes the low pressure liquid refrigerant from the expansion valve into

(A) High pressure liquid refrigerant (B) Low pressure liquid and vapour refrigerant

(C) Low pressure vapour refrigerant (D) None of these

44. Choose the correct statement

(A) A refrigerant should have low latent heat

(B) If operating temperature of system is low, then refrigerant with low boiling point should be used

(C) Pre-cooling and sub-cooling bf refrigerant are same

(D) Superheat and sensible heat of a refrigerant are same

45. Carbon dioxide is

(A) Colourless (B) Odourless (C) Non-flammable (D) All of these

46. Reducing suction pressure in refrigeration cycle

(A) Lowers evaporation temperature (B) Increases power required per ton of refrigeration

(C) Lowers compressor capacity because vapour is lighter (D) All of the above

47. The coefficient of performance of a domestic refrigerator is _____ as compared to a domestic air-conditioner.

(A) Same (B) Less (C) More (D) None of these

48. If a gas is to be liquefied, its temperature must be

(A) Increased to a value above its critical temperature

(B) Reduced to a value below its critical temperature

(C) Equal to critical temperature n (D) none of the above

49. The capacity of a domestic refrigerator is in the range of

(A) 0.1 to 0.3 TR (B) 1 to 3 TR (C) 3 to 5 TR (D) 5 to 7 TR

50. The lowest thermal diffusivity is of

(A) Iron (B) Lead (C) Aluminium (D) Rubber

FACULTY I/C

Principal,
Knowledge Institute of Technology
Kakapalayam (Po), Salem-637 50

HOD/MECH

KNOWLEDGE INSTITUTE OF TECHNOLOGY					
DEPARTMENT OF MECHANICAL ENGINEERING					
IAPMO-India – KIOT, Centre of Excellence					
Subject Name	Design of Practical HVAC System				
Name of the Student	M. Karthick				
Register No	611216114057				
Date	01/10/2018	Duration	60 Minutes	Max.Marks	50
Faculty Name	Marks Awarded				
Faculty Signature	40	FOUR ZERO			

ANSWER ALL THE QUESTIONS-(50X01=50)

1. Freon group of refrigerants are
(A) Inflammable (B) Toxic (C) Non-inflammable and toxic (D) Nontoxic and non-inflammable
2. The boiling point of ammonia is
(A) -10.5°C (B) -30°C (C) -33.3°C (D) -77.7°C
3. For obtaining high COP, the pressure range of compressor should be
(A) High (B) Low (C) Optimum (D) Any value
4. A reversible engine has ideal thermal efficiency of 30%. When it is used as a refrigerating machine with all other conditions unchanged, the coefficient of performance will be
(A) 1.33 (B) 2.33 (C) 3.33 (D) 4.33
5. Cooling water is required for following equipment in ammonia absorption plant
(A) Condenser (B) Evaporator (C) Absorber (D) Condenser, absorber and separator (rectifier)
6. The freezing point of sulphur dioxide is
(A) -56.6°C (B) -75.2°C (C) -77.7°C (D) -135.8°C
7. Mass flow ratio of NH_3 in comparison to Freon-12 for same refrigeration load and same temperature limits is of the order of
(A) 1: 1 (B) 1: 9 (C) 9: 1 (D) 1: 3
8. In a refrigeration system, the expansion device is connected between the
(A) Compressor and condenser (B) Condenser and receiver (C) Receiver and evaporator
(D) Evaporator and compressor
9. The vapour compression refrigerator employs the following cycle
(A) Rankine (B) Carnot (C) Reversed Rankine (D) Reversed Carnot
10. In actual air-conditioning applications for R-12 and R-22, and operating at a condenser temperature of 40° C and an evaporator temperature of 5° C, the heat rejection factor is about
(A) 1 (B) 1.25 (C) 2.15 (D) 5.12
11. Rating of a domestic refrigerator is of the order of
(A) 0.1 ton (B) 3 tons (C) 10 tons (D) 40 tons
12. A human body feels comfortable when the heat produced by the metabolism of human body is equal to the
(A) Heat dissipated to the surroundings (B) Heat stored in the human body
(C) Sum of (A) and (B) (D) Difference of (A) and (B)
13. The bank of tubes at the back of domestic refrigerator is
(A) Condenser tubes (B) Evaporator tubes (C) Refrigerant cooling tubes (D) Capillary tubes
14. In a lithium bromide absorption refrigeration system
(A) Lithium bromide is used as a refrigerant and water as an absorbent
(B) Water is used as a refrigerant and lithium bromide as an absorbent
(C) Ammonia is used as a refrigerant and lithium bromide as an absorbent
(D) None of the above
15. The condition of refrigerant after passing through the condenser in a vapour compression system is
(A) Saturated liquid (B) Wet vapour (C) Dry saturated vapour (D) Superheated vapour
16. Unit of thermal conductivity in M.K.S. units is
(A) K cal/kg m^2 °C (B) K cal m/hr m^2 °C (C) K cal/hr m^2 °C (D) K calm/hr °C
17. Thermal diffusivity is a

Principal,
Knowledge Institute of Technology,
Kanjalayam (Po), Salem-637 504

(A) Function of temperature (B) Physical property of a substance
(C) Dimensionless parameter (D) All of these

18. Unit of thermal conductivity in S.I. units is
(A) J/m² sec (B) J/m °K sec (C) W/m °K (D) Option (B) and (C) above.

19. Which of the following statement is wrong?
(A) The heat transfer in liquid and gases takes place according to convection
(B) The amount of heat flow through a body is dependent upon the material of the body
(C) The thermal conductivity of solid metals increases with rise in temperature
(D) Logarithmic mean temperature difference is not equal to the arithmetic mean temperature difference

20. Thermal conductivity of solid metals with rise in temperature normally
(A) Increases (B) Decreases (C) Remain constant (D) May increase or decrease depending on temperature

21. In free convection heat transfer transition from laminar to turbulent flow is governed by the critical value of the
(A) Reynold's number (B) Grashoff's number (C) Reynold's number, Grashoff's number
(D) Prandtl number, Grashoff's number

22. Thermal conductivity of non-metallic amorphous solids with decrease in temperature
(A) Increases (B) Decreases (C) Remain constant (D) May increase or decrease depending on temperature

23. According to Dalton's law of partial pressures, (where pb = Barometric pressure, pa = Partial pressure of dry air, and pv = Partial pressure of water vapour)
(A) Pb = pa – pv (B) Pb = pa + pv (C) Pb = pa × pv (D) Pb = pa/pv

24. Heat transfer takes place as per
(A) Zeroth law of thermodynamics (B) First law of thermodynamics (C) Second law of thermodynamics (D) Kirchaffs Law

25. The heat transfer by conduction through a thick sphere is given by
(A) Q = 2πkr1 r2 (T1 - T2)/ (r2 - r1) (B) Q = 4πkr1 r2 (T1 - T2)/ (r2 - r1)
(C) Q = 6πkr1 r2 (T1 - T2)/ (r2 - r1) (D) Q = 8πkr1 r2 (T1 - T2)/ (r2 - r1)

26. When heat is transferred from one particle of hot body to another by actual motion of the heated particles, it is referred to as heat transfer by
(A) Conduction (B) Convection (C) Radiation (D) Conduction and convection

27. Fourier's law of heat conduction is (where Q = Amount of heat flow through the body in unit time, A = Surface area of heat flow, taken at right angles to the direction of heat flow, dT = Temperature difference on the two faces of the body, dx = Thickness of the body, through which the heat flows, taken along the direction of heat flow, and k = Thermal conductivity of the body)
(A) k. A. (dT/dx) (B) k. A. (dx/dT) (C) k. (dT/dx) (D) k. (dx/dT)

28. When heat is transferred from hot body to cold body, in a straight line, without affecting the intervening medium, it is referred as heat transfer by
(A) Conduction (B) Convection (C) Radiation (D) Conduction and convection

29. Reynolds number (RN) is given by (where h = Film coefficient, l = Linear dimension, V = Velocity of fluid, k = Thermal conductivity, t = Temperature, ρ = Density of fluid, cp = Specific heat at constant pressure, and μ = Coefficient of absolute viscosity)
(A) RN = hl/k (B) RN = μ cp/k (C) RN = ρ V l /μ (D) RN = V^2/t.c

30. Sensible heat is the heat required to
(A) Change vapour into liquid (B) Change liquid into vapour
(C) Increase the temperature of a liquid of vapour (D) Convert water into steam and superheat it

31. Two locations where a cold air return should be installed:
(A) Open area of wall and low to the ground.
(B) Behind appliances and high on the wall.
(C) Open area of wall and high on the wall.
(D) Behind appliances and low to the ground.

32. Which of the following is a law of thermodynamics?
(A) Heat is a form of matter.
(B) Heat moves toward a place with higher intensity.
(C) Heat moves toward a place with lower intensity.

Principal,
Knowledge Institute of Technology
Kakapalayam (Po), Salem-637 504

(D)Heat moves toward a place with a higher temperature.

33. If 1 pound of water warms to 60 degrees F from 55 degrees F, what btu of latent heat will it have absorbed?

(A)2.5 (B)5 (C)10 (D)15

34. What is the amount of heat energy required to evaporate 1 pound of water?

(A)370 btu (B) 570 btu (C) 770 btu (D)970 btu

35. In an air conditioning and refrigeration system, what occurs in a condenser?

(A)The refrigerant absorbs the latent heat. (B)The refrigerant releases the latent heat.

(C)Latent heat is pressurized. (D) Latent heat is increased.

36. In Fahrenheit, the boiling point of water is _____.

(A)100 degrees (B)212 degrees (C)212 degrees (D)221 degrees

37. Ice exerts pressure _____.

(A)Upwards (B) Laterally (C) Downwards (D)In all directions

38. Pressure is usually measured in _____.

(A)Pounds per square foot (B) Pressure per square foot

(C)Pounds per square inch (D) Pressure per square inch

39. Vaporization can be increased by _____ the pressure on a liquid.

(A)Increasing (B) Equalizing (C) Reducing

40. Pressure on the high pressure side of a mechanical refrigeration unit is called _____.

(A)Suction pressure (B) Discharge or head pressure

(C) Differential I pressure (D) Absolute pressure

41. Dry bulb temperature is the temperature of air recorded by a thermometer, when

(A) It is not affected by the moisture present in the air

(B) Its bulb is surrounded by a wet cloth exposed to the air

(C) The moisture present in it begins to condense (D) None of the above

42. In refrigerators, the temperature difference between the evaporating refrigerant and the medium being cooled should be

(A) High, of the order of 25° (B) As low as possible (3 to 11°C) (C) Zero (D) Any value

43. The evaporator changes the low pressure liquid refrigerant from the expansion valve into

(A) High pressure liquid refrigerant (B) Low pressure liquid and vapour refrigerant

(C) Low pressure vapour refrigerant (D) None of these

44. Choose the correct statement

(A) A refrigerant should have low latent heat

(B) If operating temperature of system is low, then refrigerant with low boiling point should be used

(C) Pre-cooling and sub-cooling bf refrigerant are same

(D) Superheat and sensible heat of a refrigerant are same

45. Carbon dioxide is

(A) Colourless (B) Odourless (C) Non-flammable (D) All of these

46. Reducing suction pressure in refrigeration cycle

(A) Lowers evaporation temperature (B) Increases power required per ton of refrigeration

(C) Lowers compressor capacity because vapour is lighter (D) All of the above

47. The coefficient of performance of a domestic refrigerator is _____ as compared to a domestic air-conditioner.

(A) Same (B) Less (C) More (D) None of these

48. If a gas is to be liquefied, its temperature must be

(A) Increased to a value above its critical temperature

(B) Reduced to a value below its critical temperature

(C) Equal to critical temperature n (D) none of the above

49. The capacity of a domestic refrigerator is in the range of

(A) 0.1 to 0.3 TR (B) 1 to 3 TR (C) 3 to 5 TR (D) 5 to 7 TR

50. The lowest thermal diffusivity is of

(A) Iron (B) Lead (C) Aluminium (D) Rubber

FACULTY I/C

Principal,
Knowledge Institute of Technology
Kakapalayam (Po), Salem-637 504

HOD/MECH

KNOWLEDGE INSTITUTE OF TECHNOLOGY					
DEPARTMENT OF MECHANICAL ENGINEERING					
IAPMO-India – KIOT, Centre of Excellence					
Subject Name	Design of Practical HVAC System				
Name of the Student	Manisoundeswari. J				
Register No	611216114075				
Date	01.10.2018	Duration	60 Minutes	Max.Marks	50
Faculty Name	Marks Awarded				
S. Sundar	31		THIRTY ONE		
Faculty Signature					

ANSWER ALL THE QUESTIONS-(50X01=50)

1. Freon group of refrigerants are
(A) Inflammable (B) Toxic (C) Non-inflammable and toxic (D) Nontoxic and non-inflammable
2. The boiling point of ammonia is
(A) -10.5°C (B) -30°C (C) -33.3°C (D) -77.7°C
3. For obtaining high COP, the pressure range of compressor should be
(A) High (B) Low (C) Optimum (D) Any value
4. A reversible engine has ideal thermal efficiency of 30%. When it is used as a refrigerating machine with all other conditions unchanged, the coefficient of performance will be
(A) 1.33 (B) 2.33 (C) 3.33 (D) 4.33
5. Cooling water is required for following equipment in ammonia absorption plant
(A) Condenser (B) Evaporator (C) Absorber (D) Condenser, absorber and separator (rectifier)
6. The freezing point of sulphur dioxide is
(A) -56.6°C (B) -75.2°C (C) -77.7°C (D) -135.8°C
7. Mass flow ratio of NH_3 in comparison to Freon-12 for same refrigeration load and same temperature limits is of the order of
(A) 1: 1 (B) 1: 9 (C) 9: 1 (D) 1: 3
8. In a refrigeration system, the expansion device is connected between the
(A) Compressor and condenser (B) Condenser and receiver (C) Receiver and evaporator
(D) Evaporator and compressor
9. The vapour compression refrigerator employs the following cycle
(A) Rankine (B) Carnot (C) Reversed Rankine (D) Reversed Carnot
10. In actual air-conditioning applications for R-12 and R-22, and operating at a condenser temperature of 40° C and an evaporator temperature of 5° C, the heat rejection factor is about
(A) 1 (B) 1.25 (C) 2.15 (D) 5.12
11. Rating of a domestic refrigerator is of the order of
(A) 0.1 ton (B) 5 tons (C) 10 tons (D) 40 tons
12. A human body feels comfortable when the heat produced by the metabolism of human body is equal to the
(A) Heat dissipated to the surroundings (B) Heat stored in the human body
(C) Sum of (A) and (B) (D) Difference of (A) and (B)
13. The bank of tubes at the back of domestic refrigerator is
(A) Condenser tubes (B) Evaporator tubes (C) Refrigerant cooling tubes (D) Capillary tubes
14. In a lithium bromide absorption refrigeration system
(A) Lithium bromide is used as a refrigerant and water as an absorbent
(B) Water is used as a refrigerant and lithium bromide as an absorbent
(C) Ammonia is used as a refrigerant and lithium bromide as an absorbent
(D) None of the above
15. The condition of refrigerant after passing through the condenser in a vapour compression system is
(A) Saturated liquid (B) Wet vapour (C) Dry saturated vapour (D) Superheated vapour
16. Unit of thermal conductivity in M.K.S. units is
(A) K cal/kg m^2 °C (B) K cal m/hr m^2 °C (C) K cal/hr m^2 °C (D) K calm/hr °C
17. Thermal diffusivity is a

Principal,
Knowledge Institute of Technology
Kakapalayam (Po), Salem-637 504

(A) Function of temperature (B) Physical property of a substance
(C) Dimensionless parameter (D) All of these

18. Unit of thermal conductivity in S.I. units is
(A) J/m² sec (B) J/m °K sec (C) W/m °K (D) Option (B) and (C) above.

19. Which of the following statement is wrong?
(A) The heat transfer in liquid and gases takes place according to convection
(B) The amount of heat flow through a body is dependent upon the material of the body
(C) The thermal conductivity of solid metals increases with rise in temperature
(D) Logarithmic mean temperature difference is not equal to the arithmetic mean temperature difference

20. Thermal conductivity of solid metals with rise in temperature normally
(A) Increases (B) Decreases (C) Remain constant (D) May increase or decrease depending on temperature

21. In free convection heat transfer transition from laminar to turbulent flow is governed by the critical value of the
(A) Reynold's number (B) Grashoff's number (C) Reynold's number, Grashoff's number
(D) Prandtl number, Grashoff's number

22. Thermal conductivity of non-metallic amorphous solids with decrease in temperature
(A) Increases (B) Decreases (C) Remain constant (D) May increase or decrease depending on temperature

23. According to Dalton's law of partial pressures, (where pb = Barometric pressure, pa = Partial pressure of dry air, and pv = Partial pressure of water vapour)
(A) Pb = pa – pv (B) Pb = pa + pv (C) Pb = pa × pv (D) Pb = pa/pv

24. Heat transfer takes place as per
(A) Zeroth law of thermodynamics (B) First law of thermodynamics (C) Second law of thermodynamics (D) Kirchaffs Law

25.The heat transfer by conduction through a thick sphere is given by
(A) Q = 2πkr1 r2 (T1 - T2)/ (r2 - r1) (B) Q = 4πkr1 r2 (T1 - T2)/ (r2 - r1)
(C) Q = 6πkr1 r2 (T1 - T2)/ (r2 - r1) (D) Q = 8πkr1 r2 (T1 - T2)/ (r2 - r1)

26. When heat is transferred from one particle of hot body to another by actual motion of the heated particles, it is referred to as heat transfer by
(A) Conduction (B) Convection (C) Radiation (D) Conduction and convection

27. Fourier's law of heat conduction is (where Q = Amount of heat flow through the body in unit time, A = Surface area of heat flow, taken at right angles to the direction of heat flow, dT = Temperature difference on the two faces of the body, dx = Thickness of the body, through which the heat flows, taken along the direction of heat flow, and k = Thermal conductivity of the body)
(A) k. A. (dT/dx) (B) k. A. (dx/dT) (C) k. (dT/dx) (D) k. (dx/dT)

28. When heat is transferred from hot body to cold body, in a straight line, without affecting the intervening medium, it is referred as heat transfer by
(A) Conduction (B) Convection (C) Radiation (D) Conduction and convection

29. Reynolds number (RN) is given by (where h = Film coefficient, l = Linear dimension, V = Velocity of fluid, k = Thermal conductivity, t = Temperature, ρ = Density of fluid, cp = Specific heat at constant pressure, and μ = Coefficient of absolute viscosity)
(A) RN = hl/k (B) RN = μ cp/k (C) RN = ρ V l /μ (D) RN = V²/t.cp

30. Sensible heat is the heat required to
(A) Change vapour into liquid (B) Change liquid into vapour
(C) Increase the temperature of a liquid of vapour (D) Convert water into steam and superheat it

31. Two locations where a cold air return should be installed:
(A) Open area of wall and low to the ground.
(B) Behind appliances and high on the wall.
(C)Open area of wall and high on the wall.
(D)Behind appliances and low to the ground.

32. Which of the following is a law of thermodynamics?
(A)Heat is a form of matter.
(B)Heat moves toward a place with higher intensity.
(C)Heat moves toward a place with lower intensity.

Principal,
Knowledge Institute of Technology
Kakapalayam (Po), Salem-637

(D)Heat moves toward a place with a higher temperature.

33. If 1 pound of water warms to 60 degrees F from 55 degrees F, what btu of latent heat will it have absorbed?

(A)2.5 (B)5 (C)10 (D)15

34. What is the amount of heat energy required to evaporate 1 pound of water?

(A)370 btu (B) 570 btu (C) 770 btu (D)970 btu

35. In an air conditioning and refrigeration system, what occurs in a condenser?

(A)The refrigerant absorbs the latent heat. (B)The refrigerant releases the latent heat.

(C)Latent heat is pressurized. (D) Latent heat is increased.

36. In Fahrenheit, the boiling point of water is _____.

(A)100 degrees (B)112 degrees (C)212 degrees (D)221 degrees

37. Ice exerts pressure _____.

(A)Upwards (B) Laterally (C) Downwards (D)In all directions

38. Pressure is usually measured in _____.

(A)Pounds per square foot (B) Pressure per square foot

(C)Pounds per square inch (D) Pressure per square inch

39. Vaporization can be increased by _____ the pressure on a liquid.

(A)Increasing (B) Equalizing (C) Reducing

40. Pressure on the high pressure side of a mechanical refrigeration unit is called _____.

(A)Suction pressure (B) Discharge or head pressure

(C) Differential l pressure (D) Absolute pressure

41. Dry bulb temperature is the temperature of air recorded by a thermometer, when

(A) It is not affected by the moisture present in the air

(B) Its bulb is surrounded by a wet cloth exposed to the air

(C) The moisture present in it begins to condense (D) None of the above

42. In refrigerators, the temperature difference between the evaporating refrigerant and the medium being cooled should be

(A) High, of the order of 25° (B) As low as possible (3 to 11°C) (C) Zero (D) Any value

43. The evaporator changes the low pressure liquid refrigerant from the expansion valve into

(A) High pressure liquid refrigerant (B) Low pressure liquid and vapour refrigerant

(C) Low pressure vapour refrigerant (D) None of these

44. Choose the correct statement

(A) A refrigerant should have low latent heat

(B) If operating temperature of system is low, then refrigerant with low boiling point should be used

(C) Pre-cooling and sub-cooling bf refrigerant are same

(D) Superheat and sensible heat of a refrigerant are same

45. Carbon dioxide is

(A) Colourless (B) Odourless (C) Non-flammable (D) All of these

46. Reducing suction pressure in refrigeration cycle

(A) Lowers evaporation temperature (B) Increases power required per ton of refrigeration

(C) Lowers compressor capacity because vapour is lighter (D) All of the above

47. The coefficient of performance of a domestic refrigerator is _____ as compared to a domestic air-conditioner.

(A) Same (B) Less (C) More (D) None of these

48. If a gas is to be liquefied, its temperature must be

(A) Increased to a value above its critical temperature

(B) Reduced to a value below its critical temperature

(C) Equal to critical temperature n (D) none of the above

49. The capacity of a domestic refrigerator is in the range of

(A) 0.1 to 0.3 TR (B) 1 to 3 TR (C) 3 to 5 TR (D) 5 to 7 TR

50. The lowest thermal diffusivity is of

(A) Iron (B) Lead (C) Aluminium (D) Rubber

FACULTY I/C

Principal,
Knowledge Institute of Technology
Kakapalayam (Po), Salem-637 504

HOD/MECH

KNOWLEDGE INSTITUTE OF TECHNOLOGY					
DEPARTMENT OF MECHANICAL ENGINEERING					
IAPMO-India – KIOT, Centre of Excellence					
Subject Name	Design of Practical HVAC System				
Name of the Student	Saigavish O E				
Register No	611216114128				
Date	01/10/2018	Duration	60 Minutes	Max.Marks	50
Faculty Name	Marks Awarded		THREE ONE		
Faculty Signature	31				

ANSWER ALL THE QUESTIONS-(50X01=50)

1. Freon group of refrigerants are
(A) Inflammable (B) Toxic (C) Non-inflammable and toxic (D) Nontoxic and non-inflammable
2. The boiling point of ammonia is
(A) -10.5°C (B) -30°C (C) -33.3°C (D) -77.7°C
3. For obtaining high COP, the pressure range of compressor should be
(A) High (B) Low (C) Optimum (D) Any value
4. A reversible engine has ideal thermal efficiency of 30%. When it is used as a refrigerating machine with all other conditions unchanged, the coefficient of performance will be
(A) 1.33 (B) 2.33 (C) 3.33 (D) 4.33
5. Cooling water is required for following equipment in ammonia absorption plant
(A) Condenser (B) Evaporator (C) Absorber (D) Condenser, absorber and separator (rectifier)
6. The freezing point of sulphur dioxide is
(A) -56.6°C (B) -75.2°C (C) -77.7°C (D) -135.8°C
7. Mass flow ratio of NH_3 in comparison to Freon-12 for same refrigeration load and same temperature limits is of the order of
(A) 1: 1 (B) 1: 9 (C) 9: 1 (D) 1: 3
8. In a refrigeration system, the expansion device is connected between the
(A) Compressor and condenser (B) Condenser and receiver (C) Receiver and evaporator
(D) Evaporator and compressor
9. The vapour compression refrigerator employs the following cycle
(A) Rankine (B) Carnot (C) Reversed Rankine (D) Reversed Carnot
10. In actual air-conditioning applications for R-12 and R-22, and operating at a condenser temperature of 40° C and an evaporator temperature of 5° C, the heat rejection factor is about
(A) 1 (B) 1.25 (C) 2.15 (D) 5.12
11. Rating of a domestic refrigerator is of the order of
(A) 0.1 ton (B) 5 tons (C) 10 tons (D) 40 tons
12. A human body feels comfortable when the heat produced by the metabolism of human body is equal to the
(A) Heat dissipated to the surroundings (B) Heat stored in the human body
(C) Sum of (A) and (B) (D) Difference of (A) and (B)
13. The bank of tubes at the back of domestic refrigerator is
(A) Condenser tubes (B) Evaporator tubes (C) Refrigerant cooling tubes (D) Capillary tubes
14. In a lithium bromide absorption refrigeration system
(A) Lithium bromide is used as a refrigerant and water as an absorbent
(B) Water is used as a refrigerant and lithium bromide as an absorbent
(C) Ammonia is used as a refrigerant and lithium bromide as an absorbent
(D) None of the above
15. The condition of refrigerant after passing through the condenser in a vapour compression system is
(A) Saturated liquid (B) Wet vapour (C) Dry saturated vapour (D) Superheated vapour
16. Unit of thermal conductivity in M.K.S. units is
(A) K cal/kg m^2 °C (B) K cal m/hr m^2 °C (C) K cal/hr m^2 °C (D) K calm/hr °C
17. Thermal diffusivity is a

Principal,
Knowledge Institute of Technology
Kakapalayam (Po), Salem-637 504

(A) Function of temperature (B) Physical property of a substance
(C) Dimensionless parameter (D) All of these

18. Unit of thermal conductivity in S.I. units is
(A) J/m² sec (B) J/m °K sec (C) W/m °K (D) Option (B) and (C) above.

19. Which of the following statement is wrong?
(A) The heat transfer in liquid and gases takes place according to convection
(B) The amount of heat flow through a body is dependent upon the material of the body
(C) The thermal conductivity of solid metals increases with rise in temperature
(D) Logarithmic mean temperature difference is not equal to the arithmetic mean temperature difference

20. Thermal conductivity of solid metals with rise in temperature normally
(A) Increases (B) Decreases (C) Remain constant (D) May increase or decrease depending on temperature

21. In free convection heat transfer transition from laminar to turbulent flow is governed by the critical value of the
(A) Reynold's number (B) Grashoff's number (C) Reynold's number, Grashoff's number
(D) Prandtl number, Grashoff's number

22. Thermal conductivity of non-metallic amorphous solids with decrease in temperature
(A) Increases (B) Decreases (C) Remain constant (D) May increase or decrease depending on temperature

23. According to Dalton's law of partial pressures, (where pb = Barometric pressure, pa = Partial pressure of dry air, and pv = Partial pressure of water vapour)
(A) Pb = pa – pv (B) Pb = pa + pv (C) Pb = pa × pv (D) Pb = pa/pv

24. Heat transfer takes place as per
(A) Zeroth law of thermodynamics (B) First law of thermodynamics (C) Second law of thermodynamics (D) Kirchaffs Law

25. The heat transfer by conduction through a thick sphere is given by
(A) $Q = 2\pi kr1\ r2\ (T1 - T2)/(r2 - r1)$ (B) $Q = 4\pi kr1\ r2\ (T1 - T2)/(r2 - r1)$
(C) $Q = 6\pi kr1\ r2\ (T1 - T2)/(r2 - r1)$ (D) $Q = 8\pi kr1\ r2\ (T1 - T2)/(r2 - r1)$

26. When heat is transferred from one particle of hot body to another by actual motion of the heated particles, it is referred to as heat transfer by
(A) Conduction (B) Convection (C) Radiation (D) Conduction and convection

27. Fourier's law of heat conduction is (where Q = Amount of heat flow through the body in unit time, A = Surface area of heat flow, taken at right angles to the direction of heat flow, dT = Temperature difference on the two faces of the body, dx = Thickness of the body, through which the heat flows, taken along the direction of heat flow, and k = Thermal conductivity of the body)
(A) k. A. (dT/dx) (B) k. A. (dx/dT) (C) k. (dT/dx) (D) k. (dx/dT)

28. When heat is transferred from hot body to cold body, in a straight line, without affecting the intervening medium, it is referred as heat transfer by
(A) Conduction (B) Convection (C) Radiation (D) Conduction and convection

29. Reynolds number (RN) is given by (where h = Film coefficient, l = Linear dimension, V = Velocity of fluid, k = Thermal conductivity, t = Temperature, ρ = Density of fluid, cp = Specific heat at constant pressure, and μ = Coefficient of absolute viscosity)
(A) RN = hl/k (B) RN = μ cp/k (C) RN = ρ V l /μ (D) RN = V²/t.cp

30. Sensible heat is the heat required to
(A) Change vapour into liquid (B) Change liquid into vapour
(C) Increase the temperature of a liquid of vapour (D) Convert water into steam and superheat it

31. Two locations where a cold air return should be installed:
(A) Open area of wall and low to the ground.
(B) Behind appliances and high on the wall.
(C) Open area of wall and high on the wall.
(D) Behind appliances and low to the ground.

32. Which of the following is a law of thermodynamics?
(A) Heat is a form of matter.
(B) Heat moves toward a place with higher intensity.
(C) Heat moves toward a place with lower intensity.

Principal,
Knowledge Institute of Technology
Kakapalayam (Po), Salem-637 504

(D)Heat moves toward a place with a higher temperature.

33. If 1 pound of water warms to 60 degrees F from 55 degrees F, what btu of latent heat will it have absorbed?

(A)2.5 (B)5 (C)10 (D)15

34. What is the amount of heat energy required to evaporate 1 pound of water?

(A)370 btu (B) 570 btu (C) 770 btu (D)970 btu

35. In an air conditioning and refrigeration system, what occurs in a condenser?

(A)The refrigerant absorbs the latent heat. (B)The refrigerant releases the latent heat.

(C)Latent heat is pressurized. (D) Latent heat is increased.

36. In Fahrenheit, the boiling point of water is _____.

(A)100 degrees (B)112 degrees (C)212 degrees (D)221 degrees

37. Ice exerts pressure _____.

(A)Upwards (B) Laterally (C) Downwards (D)In all directions

38. Pressure is usually measured in _____.

(A)Pounds per square foot (B) Pressure per square foot

(C)Pounds per square inch (D) Pressure per square inch

39. Vaporization can be increased by _____ the pressure on a liquid.

(A)Increasing (B) Equalizing (C) Reducing

40. Pressure on the high pressure side of a mechanical refrigeration unit is called _____.

(A)Suction pressure (B) Discharge or head pressure

(C) Differential l pressure (D) Absolute pressure

41. Dry bulb temperature is the temperature of air recorded by a thermometer, when

(A) It is not affected by the moisture present in the air

(B) Its bulb is surrounded by a wet cloth exposed to the air

(C) The moisture present in it begins to condense (D) None of the above

42. In refrigerators, the temperature difference between the evaporating refrigerant and the medium being cooled should be

(A) High, of the order of 25° (B) As low as possible (3 to 11°C) (C) Zero (D) Any value

43. The evaporator changes the low pressure liquid refrigerant from the expansion valve into

(A) High pressure liquid refrigerant (B) Low pressure liquid and vapour refrigerant

(C) Low pressure vapour refrigerant (D) None of these

44. Choose the correct statement

(A) A refrigerant should have low latent heat

(B) If operating temperature of system is low, then refrigerant with low boiling point should be used

(C) Pre-cooling and sub-cooling bf refrigerant are same

(D) Superheat and sensible heat of a refrigerant are same

45. Carbon dioxide is

(A) Colourless (B) Odourless (C) Non-flammable (D) All of these

46. Reducing suction pressure in refrigeration cycle

(A) Lowers evaporation temperature (B) Increases power required per ton of refrigeration

(C) Lowers compressor capacity because vapour is lighter (D) All of the above

47. The coefficient of performance of a domestic refrigerator is _____ as compared to a domestic air-conditioner.

(A) Same (B) Less (C) More (D) None of these

48. If a gas is to be liquefied, its temperature must be

(A) Increased to a value above its critical temperature

(B) Reduced to a value below its critical temperature

(C) Equal to critical temperature n (D) none of the above

49. The capacity of a domestic refrigerator is in the range of

(A) 0.1 to 0.3 TR (B) 1 to 3 TR (C) 3 to 5 TR (D) 5 to 7 TR

50. The lowest thermal diffusivity is of

(A) Iron (B) Lead (C) Aluminium (D) Rubber

FACULTY I/C

Principal,
Knowledge Institute of Technology
Kakapalayam (Po), Salem-637 504

HOD/MECH

KNOWLEDGE INSTITUTE OF TECHNOLOGY					
DEPARTMENT OF MECHANICAL ENGINEERING					
IAPMO-India – KIOT, Centre of Excellence					
Subject Name	Design of Practical HVAC System				
Name of the Student	HARI SURYA S				
Register No	611216114321				
Date	1/10/2018	Duration	60 Minutes	Max.Marks	50
Faculty Name	Marks Awarded				
Faculty Signature	9.2		THREE TWO		

ANSWER ALL THE QUESTIONS-(50X01=50)

1. Freon group of refrigerants are
(A) Inflammable (B) Toxic (C) Non-inflammable and toxic (D) Nontoxic and non-inflammable
2. The boiling point of ammonia is
(A) -10.5°C (B) -30°C (C) -33.3°C (D) -77.7°C
3. For obtaining high COP, the pressure range of compressor should be
(A) High (B) Low (C) Optimum (D) Any value
4. A reversible engine has ideal thermal efficiency of 30%. When it is used as a refrigerating machine with all other conditions unchanged, the coefficient of performance will be
(A) 1.33 (B) 2.33 (C) 3.33 (D) 4.33
5. Cooling water is required for following equipment in ammonia absorption plant
(A) Condenser (B) Evaporator (C) Absorber (D) Condenser, absorber and separator (rectifier)
6. The freezing point of sulphur dioxide is
(A) -56.6°C (B) -75.2°C (C) -77.7°C (D) -135.8°C
7. Mass flow ratio of NH_3 in comparison to Freon-12 for same refrigeration load and same temperature limits is of the order of
(A) 1: 1 (B) 1: 9 (C) 9: 1 (D) 1: 3
8. In a refrigeration system, the expansion device is connected between the
(A) Compressor and condenser (B) Condenser and receiver (C) Receiver and evaporator
(D) Evaporator and compressor
9. The vapour compression refrigerator employs the following cycle
(A) Rankine (B) Carnot (C) Reversed Rankine (D) Reversed Carnot
10. In actual air-conditioning applications for R-12 and R-22, and operating at a condenser temperature of 40° C and an evaporator temperature of 5° C, the heat rejection factor is about
(A) 1 (B) 1.25 (C) 2.15 (D) 5.12
11. Rating of a domestic refrigerator is of the order of
(A) 0.1 ton (B) 5 tons (C) 10 tons (D) 40 tons
12. A human body feels comfortable when the heat produced by the metabolism of human body is equal to the
(A) Heat dissipated to the surroundings (B) Heat stored in the human body
(C) Sum of (A) and (B) (D) Difference of (A) and (B)
13. The bank of tubes at the back of domestic refrigerator is
(A) Condenser tubes (B) Evaporator tubes (C) Refrigerant cooling tubes (D) Capillary tubes
14. In a lithium bromide absorption refrigeration system
(A) Lithium bromide is used as a refrigerant and water as an absorbent
(B) Water is used as a refrigerant and lithium bromide as an absorbent
(C) Ammonia is used as a refrigerant and lithium bromide as an absorbent
(D) None of the above
15. The condition of refrigerant after passing through the condenser in a vapour compression system is
(A) Saturated liquid (B) Wet vapour (C) Dry saturated vapour (D) Superheated vapour
16. Unit of thermal conductivity in M.K.S. units is
(A) K cal/kg m^2 °C (B) K cal m/hr m^2 °C (C) K cal/hr m^2 °C (D) K calm/hr °C
17. Thermal diffusivity is a

Principal,
Knowledge Institute of Technology
Kakapalayam (Po), Salem-637 504

(A) Function of temperature (B) Physical property of a substance
(C) Dimensionless parameter (D) All of these

18. Unit of thermal conductivity in S.I. units is
(A) J/m² sec (B) J/m °K sec (C) W/m °K (D) Option (B) and (C) above.

19. Which of the following statement is wrong?
(A) The heat transfer in liquid and gases takes place according to convection
(B) The amount of heat flow through a body is dependent upon the material of the body
(C) The thermal conductivity of solid metals increases with rise in temperature
(D) Logarithmic mean temperature difference is not equal to the arithmetic mean temperature difference

20. Thermal conductivity of solid metals with rise in temperature normally
(A) Increases (B) Decreases (C) Remain constant (D) May increase or decrease depending on temperature

21. In free convection heat transfer transition from laminar to turbulent flow is governed by the critical value of the
(A) Reynold's number (B) Grashoff's number (C) Reynold's number, Grashoff's number
(D) Prandtl number, Grashoff's number

22. Thermal conductivity of non-metallic amorphous solids with decrease in temperature
(A) Increases (B) Decreases (C) Remain constant (D) May increase or decrease depending on temperature

23. According to Dalton's law of partial pressures, (where pb = Barometric pressure, pa = Partial pressure of dry air, and pv = Partial pressure of water vapour)
(A) Pb = pa – pv (B) Pb = pa + pv (C) Pb = pa × pv (D) Pb = pa/pv

24. Heat transfer takes place as per
(A) Zeroth law of thermodynamics (B) First law of thermodynamics (C) Second law of thermodynamics (D) Kirchaffs Law

25.The heat transfer by conduction through a thick sphere is given by
(A) Q = 2πkr1 r2 (T1 - T2)/ (r2 - r1) (B) Q = 4πkr1 r2 (T1 - T2)/ (r2 - r1)
(C) Q = 6πkr1 r2 (T1 - T2)/ (r2 - r1) (D) Q = 8πkr1 r2 (T1 - T2)/ (r2 - r1)

26. When heat is transferred from one particle of hot body to another by actual motion of the heated particles, it is referred to as heat transfer by
(A) Conduction (B) Convection (C) Radiation (D) Conduction and convection

27. Fourier's law of heat conduction is (where Q = Amount of heat flow through the body in unit time, A = Surface area of heat flow, taken at right angles to the direction of heat flow, dT = Temperature difference on the two faces of the body, dx = Thickness of the body, through which the heat flows, taken along the direction of heat flow, and k = Thermal conductivity of the body)
(A) k. A. (dT/dx) (B) k. A. (dx/dT) (C) k. (dT/dx) (D) k. (dx/dT)

28. When heat is transferred from hot body to cold body, in a straight line, without affecting the intervening medium, it is referred as heat transfer by
(A) Conduction (B) Convection (C) Radiation (D) Conduction and convection

29. Reynolds number (RN) is given by (where h = Film coefficient, l = Linear dimension, V = Velocity of fluid, k = Thermal conductivity, t = Temperature, ρ = Density of fluid, cp = Specific heat at constant pressure, and μ = Coefficient of absolute viscosity)
(A) RN = hl/k (B) RN = μ cp/k (C) RN = ρ V l /μ (D) RN = V²/t.cp

30. Sensible heat is the heat required to
(A) Change vapour into liquid (B) Change liquid into vapour
(C) Increase the temperature of a liquid of vapour (D) Convert water into steam and superheat it

31. Two locations where a cold air return should be installed:
(A) Open area of wall and low to the ground.
(B) Behind appliances and high on the wall.
(C)Open area of wall and high on the wall.
(D)Behind appliances and low to the ground.

32. Which of the following is a law of thermodynamics?
(A)Heat is a form of matter.
(B)Heat moves toward a place with higher intensity.
(C)Heat moves toward a place with lower intensity.

Principal,
Knowledge Institute of Technology
Kadapalayam (Po), Salem-637 504

(D)Heat moves toward a place with a higher temperature.

33. If 1 pound of water warms to 60 degrees F from 55 degrees F, what btu of latent heat will it have absorbed?

(A)2.5 (B)5 (C)10 (D)15

34. What is the amount of heat energy required to evaporate 1 pound of water?

(A)370 btu (B) 570 btu (C) 770 btu (D)970 btu

35. In an air conditioning and refrigeration system, what occurs in a condenser?

(A)The refrigerant absorbs the latent heat. (B)The refrigerant releases the latent heat.

(C)Latent heat is pressurized. (D) Latent heat is increased.

36. In Fahrenheit, the boiling point of water is _____.

(A)100 degrees (B)112 degrees (C)212 degrees (D)221 degrees

37. Ice exerts pressure _____.

(A)Upwards (B) Laterally (C) Downwards (D)In all directions

38. Pressure is usually measured in _____.

(A)Pounds per square foot (B) Pressure per square foot

(C)Pounds per square inch (D) Pressure per square inch

39. Vaporization can be increased by _____ the pressure on a liquid.

(A)Increasing (B) Equalizing (C) Reducing

40. Pressure on the high pressure side of a mechanical refrigeration unit is called _____.

(A)Suction pressure (B) Discharge or head pressure

(C) Differential l pressure (D) Absolute pressure

41. Dry bulb temperature is the temperature of air recorded by a thermometer, when

(A) It is not affected by the moisture present in the air

(B) Its bulb is surrounded by a wet cloth exposed to the air

(C) The moisture present in it begins to condense (D) None of the above

42. In refrigerators, the temperature difference between the evaporating refrigerant and the medium being cooled should be

(A) High, of the order of 25° (B) As low as possible (3 to 11°C) (C) Zero (D) Any value

43. The evaporator changes the low pressure liquid refrigerant from the expansion valve into

(A) High pressure liquid refrigerant (B) Low pressure liquid and vapour refrigerant

(C) Low pressure vapour refrigerant (D) None of these

44. Choose the correct statement

(A) A refrigerant should have low latent heat

(B) If operating temperature of system is low, then refrigerant with low boiling point should be used

(C) Pre-cooling and sub-cooling bf refrigerant are same

(D) Superheat and sensible heat of a refrigerant are same

45. Carbon dioxide is

(A) Colourless (B) Odourless (C) Non-flammable (D) All of these

46. Reducing suction pressure in refrigeration cycle

(A) Lowers evaporation temperature (B) Increases power required per ton of refrigeration

(C) Lowers compressor capacity because vapour is lighter (D) All of the above

47. The coefficient of performance of a domestic refrigerator is _____ as compared to a domestic air-conditioner.

(A) Same (B) Less (C) More (D) None of these

48. If a gas is to be liquefied, its temperature must be

(A) Increased to a value above its critical temperature

(B) Reduced to a value below its critical temperature

(C) Equal to critical temperature n (D) none of the above

49. The capacity of a domestic refrigerator is in the range of

(A) 0.1 to 0.3 TR (B) 1 to 3 TR (C) 3 to 5 TR (D) 5 to 7 TR

50. The lowest thermal diffusivity is of

(A) Iron (B) Lead (C) Aluminium (D) Rubber

FACULTY I/C

Principal,
Knowledge Institute of Technology,
Kakapalayam (Po), Salem-637 504

HOD/MECH

KNOWLEDGE INSTITUTE OF TECHNOLOGY, SALEM-637504

DEPARTMENT OF MECHANICAL ENGINEERING

CENTER FOR HEATING VENTILATION AND AIR CONDITIONING

BATCH- (2016 - 20) AY: 2018-19

Design of Practical HVAC System – Mark Statement

Max.Marks: 50

Year/Sem: III / V

Date: 04.10.2018

S.No.	Register Number	Student Name	Mark Secured	Result Status
1.	611216114009	BASKAR N	35	PASS
2.	611216114012	BLESSY JEYAPAULINE J	43	PASS
3.	611216114015	DEEPAK KUMAR V M	37	PASS
4.	611216114016	DEVAKRISHNA K	41	PASS
5.	611216114020	DHUKILAN S	40	PASS
6.	611216114021	DHYANESHKANNA R	35	PASS
7.	611216114024	DINAKARAN S	38	PASS
8.	611216114028	DINESHKUMAR T	29	PASS
9.	611216114030	DIVAKAR P	27	PASS
10.	611216114038	GOKULNATH S	33	PASS
11.	611216114040	GOKULRAJ P	31	PASS
12.	611216114049	HARISH B	38	PASS
13.	611216114050	HARI VENKATESH Y	43	PASS
14.	611216114053	JAWAHARBALAJI S	41	PASS
15.	611216114054	JEEVARAJAN M	36	PASS
16.	611216114055	JOSHUA JACOB S	33	PASS
17.	611216114057	KARTHICK M	40	PASS
18.	611216114058	KARTHICK R	43	PASS
19.	611216114060	KARTHICK RAJA K	39	PASS
20.	611216114061	KARTHIKEYAN M	38	PASS
21.	611216114062	KARTHIKEYAN S	29	PASS
22.	611216114063	KARTHIKRAJA A	28	PASS
23.	611216114064	KATHIRVEL C	29	PASS
24.	611216114069	KISHOR KUMAR K	32	PASS
25.	611216114075	MANISOWDESVAR J	31	PASS
26.	611216114092	NAVEENPRAKASH S	32	PASS
27.	611216114098	PAUL SIMON THEKKANATH	45	PASS
28.	611216114100	PAVITHRAN K	41	PASS
29.	611216114101	POOVENTHAN J	36	PASS
30.	611216114102	PRADEEP S	37	PASS
31.	611216114105	PRAKASH T	33	PASS
32.	611216114108	PRASANTH D	39	PASS
33.	611216114111	PRAVEEN M E	34	PASS
34.	611216114128	SAIGIRISH O E	31	PASS
35.	611216114129	SAKTHI M	43	PASS
36.	611216114172	VINOTH KUMAR K	40	PASS
37.	611216114308	DINESH KUMAR P	39	PASS
38.	611216114321	HARI SURYA S	32	PASS
39.	611216114331	NAGAPPAN N	29	PASS
40.	611216114346	SELLADURAI R	27	PASS
41.	611216114351	SURENTHAR R	36	PASS
42.	611216114359	VISWAJITH S	43	PASS

Note: Minimum 25 marks will be considered as pass mark for this certification course.

FACULTY I/C **HOD/MECH** **PRINCIPAL**

Principal,
Knowledge Institute of Technology
Kakapalayam (Po), Salem-637 504

KNOWLEDGE INSTITUTE OF TECHNOLOGY, SALEM
Department of Mechanical Engineering

FEEDBACK FORM
CERTIFICATION COURSE (HVAC)

Academic Year: 2018-19

Date: 25/09/2018

		Strongly agree	Agree	Neutral	Disagree	Strongly disagree
1	About Teaching Methodology		✓			
2	About training handled by faculty			✓		
3	About Practical Session	✓				
4	About Industries Practice	✓				
5	Knowledge Beyond the syllabus		✓			
6	Overall Experience about this course			✓		

Suggestion for Improvement:

- Need more practical Session

Student Signature: B. Harish [B.HARISH]

Principal,
Knowledge Institute of Technology
Kakapalayam (Po), Salem-637 5

KNOWLEDGE INSTITUTE OF TECHNOLOGY, SALEM
Department of Mechanical Engineering

FEEDBACK FORM
CERTIFICATION COURSE (HVAC)

Academic Year: 2018-19 Date: 25/09/2018

		Strongly agree	Agree	Neutral	Disagree	Strongly disagree
1	About Teaching Methodology			✓		
2	About training handled by faculty		✓			
3	About Practical Session	✓				
4	About Industries Practice			✓		
5	Knowledge Beyond the syllabus			✓		
6	Overall Experience about this course		✓			

Suggestion for Improvement:

- Real time practice is need.
- Industrial visit is need.

Student Signature: M. Karthick (M. Karthick).

Principal,
Knowledge Institute of Technology
Kakapalayam (Po), Salem-637 504

KNOWLEDGE INSTITUTE OF TECHNOLOGY, SALEM
Department of Mechanical Engineering

FEEDBACK FORM
CERTIFICATION COURSE (HVAC)

Academic Year: 2018-19 Date: 25.09.2018

		Strongly agree	Agree	Neutral	Disagree	Strongly disagree
1	About Teaching Methodology			✓		
2	About training handled by faculty		✓			
3	About Practical Session		✓			
4	About Industries Practice		✓			
5	Knowledge Beyond the syllabus			✓		
6	Overall Experience about this course		✓			

Suggestion for Improvement:

⇒ Need more Practical session

⇒ Need more Industrial visit

Student Signature:	Manisowdesyar.J (MANISOWDESYAR-J)

Principal,
Knowledge Institute of Technology
Kakapalayam (Po), Salem-637 504

KNOWLEDGE INSTITUTE OF TECHNOLOGY, SALEM
Department of Mechanical Engineering

FEEDBACK FORM
CERTIFICATION COURSE (HVAC)

Academic Year: 2018-19 **Date:** 25/09/2018

		Strongly agree	Agree	Neutral	Disagree	Strongly disagree
1	About Teaching Methodology		✓			
2	About training handled by faculty		✓			
3	About Practical Session			✓		
4	About Industries Practice			✓		
5	Knowledge Beyond the syllabus		✓			
6	Overall Experience about this course			✓		

Suggestion for Improvement:

i) Need more practical session

Student Signature: Saigarsh (Saigarish)

Principal,
Knowledge Institute of Technology
Kakapalayam (Po), Salem-637 504

KNOWLEDGE INSTITUTE OF TECHNOLOGY, SALEM
Department of Mechanical Engineering

FEEDBACK FORM
CERTIFICATION COURSE (HVAC)

Academic Year: 2018-19

Date: 25/9/2018

		Strongly agree	Agree	Neutral	Disagree	Strongly disagree
1	About Teaching Methodology		✓			
2	About training handled by faculty	✓				
3	About Practical Session			✓		
4	About Industries Practice		✓			
5	Knowledge Beyond the syllabus		✓			
6	Overall Experience about this course			✓		

Suggestion for Improvement:

More Practical Sessions are needed.
Real time experience also needed.

Student Signature:	Harichurya.S (Hari Surya)

Principal,
Knowledge Institute of Technology
Kakapalayam (Po), Salem-637

IAPMO-INDIA & KNOWLEDGE INSTITUTE OF TECHNOLOGY

DEPARTMENT OF MECHANICAL ENGINEERING

Certificate of Completion

This certificate is awarded to

BASKAR N (611216114009)

In recognition of sucessful completion of

"*Design of Practical HVAC System*"

Conducted by "IIK-Center" from 03.09.2018 to 25.09.2018 Department of Mechanical Engineering, Knowledge Institute of Technology salem, Tamilnadu, India.

HOD/Mech

Principal,
Knowledge Institute of Technology
Kanakkampalayam (Po), Salem-637 504

Principal

IAPMO-INDIA & KNOWLEDGE INSTITUTE OF TECHNOLOGY

DEPARTMENT OF MECHANICAL ENGINEERING

Certificate of Completion

This certificate is awarded to

DIVAKAR P (611216114030)

In recognition of sucessful completion of

"*Design of Practical HVAC System*"

Conducted by "IIK-Center" from 03.09.2018 to 25.09.2018 Department of Mechanical Engineering, Knowledge Institute of Technology salem, Tamilnadu, India.

Principal,
Knowledge Institute of Technology
Kakapalayam (Po), Salem-637 504

HOD/Mech

Principal

IAPMO-INDIA & KNOWLEDGE INSTITUTE OF TECHNOLOGY

DEPARTMENT OF MECHANICAL ENGINEERING

Certificate of Completion

This certificate is awarded to

HARISH B (611216114049)

In recognition of sucessful completion of

"*Design of Practical HVAC System*"

Conducted by "IIK-Center" from 03.09.2018 to 25.09.2018 Department of Mechanical Engineering, Knowledge Institute of Technology salem, Tamilnadu, India.

Principal,
Knowledge Institute of Technology,
Kakapalayam (Po), Salem-637 504

HOD/Mech

Principal

IAPMO-INDIA & KNOWLEDGE INSTITUTE OF TECHNOLOGY

DEPARTMENT OF MECHANICAL ENGINEERING

Certificate of Completion

This certificate is awarded to

KARTHICK R (611216114058)

In recognition of sucessful completion of

"*Design of Practical HVAC System*"

Conducted by "IIK-Center" from 03.09.2018 to 25.09.2018 Department of Mechanical Engineering, Knowledge Institute of Technology salem, Tamilnadu, India.

Principal,
Knowledge Institute of Technology,
Kalvalavam (Po), Salem-637 504.

HOD/Mech

Principal

IAPMO-INDIA & KNOWLEDGE INSTITUTE OF TECHNOLOGY

DEPARTMENT OF MECHANICAL ENGINEERING

Certificate of Completion

This certificate is awarded to

MANISOWDESVAR J (611216114075)

In recognition of sucessful completion of

"*Design of Practical HVAC System*"

Conducted by "IIK-Center" from 03.09.2018 to 25.09.2018 Department of Mechanical Engineering, Knowledge Institute of Technology salem, Tamilnadu, India.

HOD/Mech

Principal,
Knowledge Institute of Technology
Kanalavam (Po), Salem-637 504

Principal

KNOWLEDGE INSTITUTE OF TECHNOLOGY, SALEM – 637 504
Approved by AICTE, Affiliated to Anna University, Chennai.

Report of Program / Event Conducted

Name of the Program / Event		Solid Modeling (Level-1) using CATIA & NXCAD software	
Resource Person details		Mr..S.SANTHOSH & Mr. Mr.K.V.RANGASAMY Assistant Professor, Dept. of Mechanical Engg. KIOT	
Organizing Dept. / Cell	Mechanical	Details of Participant	IV Students = 94
Date, Time and Venue	22.01.2019-05.02.2019 COE – CRCPDT, A-Block, KIOT.		

Description of the program

1. He discussed about 4 features of CATIA & NXCAD software. It contains CATIA & NXCAD basic level.
2. He explained about Introduction sketcher workbench, part modeling and assembly design.
3. Also he explained about Geometric Dimensioning and Tolerancing (GD&T).
4. He shared his personal experiences and difficulties he faced in his Industrial Career.

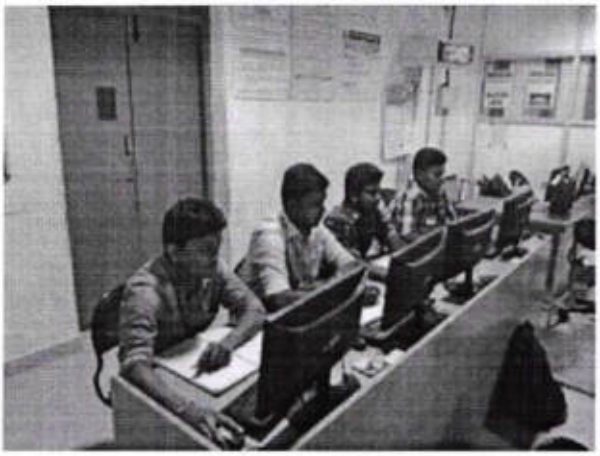

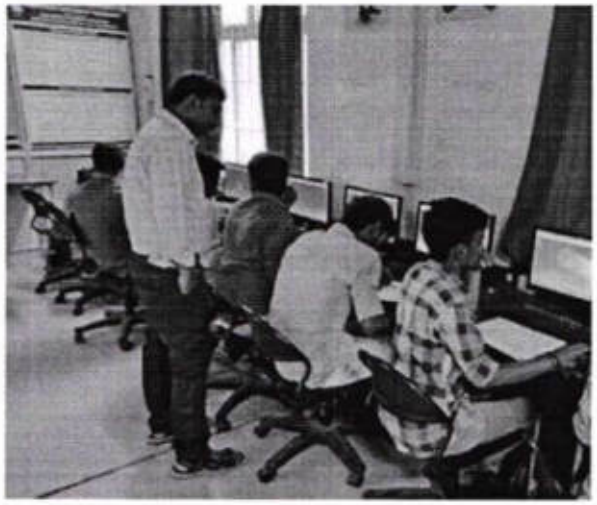

Principal,
Knowledge Institute of Technolo
Kakapalayam (Po), Salem-637

From

J.Prakash,
Assistant Professor
Department of Mechanical Engineering,
Knowledge Institute of Technology,
Salem.

To

The Principal,
Knowledge Institute of Technology,
Salem

Through: Head of the Department, Department of Mechanical Engineering

Respected Sir,

Sub: Certification Course conduction–regarding

Composite research Centre for Product Design, Digital Manufacturing and Technical Documentation (CRCPDT) and Designers club is jointly organizing Solid Modeling (Level-1) using CATIA & NXCAD software. In this regard, I request your permission to execute the Certificate course for Mechanical Engineering students.

Thanking You

Salem

09.01.2019

Yours Faithfully

J.Prakash

Forwarded to the Principal

Head
permitted

PRINCIPAL
Knowledge Institute of Technology
Kakapalayam (PO) Salem - 637 504

KNOWLEDGE INSTITUTE OF TECHNOLOGY, SALEM - 637 504			
CIRCULAR			
Circular No.		**Date**	09.01.2019
To	IV-Year students		
Subject	Solid Modeling (Level-1) using CATIA & NXCAD software		
Circular issued by	Center of Excellence – CRCPDT & Designers Club, Department of Mechanical Engineering.		

This is to inform you that Center of Excellence – Composite Research Centre for Product Design, Digital Manufacturing and Technical Documentation (CRCPDT) & Designers Club has planned to conduct Solid Modeling (Level-1) using CATIA & NXCAD software for III and II year students. Registered students are requested to attend the program as per the given schedule.

SL. NO.	NAME OF THE PROGRAM	VENUE DATE & TIME	RESOURCE PERSON
1	Solid Modeling (Level-1) using CATIA & NXCAD software	COE – CRCPDT, A-Block, KIOT. 22.01.2019 TO 05.02.2019	Mr.S.Santhosh Mr.K.V.Rangasamy AP, Mecahanical Engg. KIOT

For Further Details Kindly Contact: Mr.J.Prakash, AP/Mech, Faculty Incharge, COE-CRCPDT. M:+91 9789565007

Faculty I/c	HOD	PRINCIPAL

PRINCIPAL,
Knowledge Institute of Technology
Kakapalayam (PO) Salem - 637 504

Certificate Course
on
Solid Modeling (Level-1)
using NXCAD software

22.01.2019 to 05.02.2019

Organized by

Department of Mechanical Engineering

KNOWLEDGE
INSTITUTE OF TECHNOLOGY

(Accredited by NAAC)

KIOT campus, Kakapalayam (PO), Salem-637 504,
Tamil Nadu, India.
www.kiot.ac.in

in association with

DASSAULT SYSTEMES

Harita TECHSERV

PRINCIPAL,
Knowledge Institute of Technology
Kakapalayam (PO) Salem - 637 504

About KIOT

KIOT is one of the best engineering institutes in Salem. It is approved by AICTE, New Delhi, affiliated to Anna University, Chennai and offers 5 UG Programs (Mech., Civil, EEE, ECE and CSE), 4 PG Programs (ISE, CSE, EST and VLSI Design) and 2 Ph.D. programs (Mech. and IC Engg.). KIOT is accredited by NAAC In the single window counselling (TNEA 2018) seats of KIOT were filled in 62nd position among more than 500 self-financing engineering colleges. KIOT is known for its placement of students in well reputed organisations. KIOT has been rated one among the top 3 institutions across India in AICTE-CII Survey of Industry Linked Technical institutions-2016 under the category of emerging engineering colleges. KIOT was recognised nationally by ISTE in awarding Best Engineering College Principal Award to Dr.PSS.Srinivasan, Principal, KIOT. The college has 17 industry linked labs, Research Centres and COEs. KIOT faculty have published 200+ papers in conference and 250– Research Papers in reputed journals in the last 3 years. We also offer MBA programme at Knowledge Business School, Salem (KBSS), a sister institution of KIOT.

About the Department

Vision: To create competent and industry relevant Mechanical Engineers with professional and social values to meet global challenges.

Mission:

- Enabling environment for effective teaching - learning and research to meet global challenges.
- Motivating students to pursue higher education and to excel in competitive examinations and entrepreneurship.
- Establish a continuous Industry Institute Interaction to make the students employable.
- Inculcate the students leadership quality with ethical values and spirit of team work.

Mechanical Engineering program, accredited by NBA, is one of the vibrant departments of KIOT and offers B.E Mechanical Engineering, M.E Industrial Safety Engineering & Ph.D. programmes. The Department was awarded with platinum ranking in AICTE-CII Survey of Industry Linked Technical Institutions-2016. Dr.K.Visagavel, The Department has a team of dedicated faculty members with 5 Ph.D. The Department has established industrial collaborative research centres with Harita Techserv Pvt. Ltd. and IAPMO (International Association of Plumbing and Mechanical Officials).

SYLLABUS

1.Introduction to NXCAD V5

Introduction About NXCAD V5, History of NXCAD, NXCAD modeling process. Parametric design concept, feature based design. About PLM, NXCAD Features. SKETCHER, Creating the new part.

2.SKETCHER WORKBENCH

Basic sketch, Sketch in task environment, Selection tools, Profile, Predefined shapes, Circles, Spline, Conics, Line, Points,

Operations, Corner, Chamfer, Projections, Transformations.

Constrains. Constrain dialogue box. Constrains, Fix together. Animate constrain. Edit multi constrain. Sketch tools, Grid, Snap on grid, Construction. Geometrical constrains, Dimensional constrains., Sketch analysis Visualization tools, View tool bar, Workbench.

3.PART MODELING

Sketch based features Pad, Multipad, Drafted filleted pad. Pocket, Multipocket, Drafted filleted pocket Shafts, groove Holes Rib, Slots Solid combine, Stiffner.

Multi section solid, Multi section solid removal Edit Geometry, Parent child relationship, copy & paste features, Dress up features -Edge fillet, Variable radius fillet, Face to face fillet, Tri tangent fillet Chamfer Drafts.

Drafted reflected line, Variable angle draft Shell feature. Thicken Thread, Remove face, Replace face Transformation Features-Translation, Rotation, Symmetry, Axis to axis Mirror, Pattern-Rectangular.

Circular, User defined Design table, Power copy, Functions and relations, Catalog Scaling-Scale. Affinity Reference elements- Point, Axis, Planes. Boolean operations- Assemble, Add, Remove. Intersect, Union trim.

4. ASSEMBLY DESIGN

Introduction on assembly Assembly approaches-Top down assembly. Bottom up assembly Product structure tools Component, Product, Part Existing component, Existing component with positioning Replace component.

Graph tree reordering, Generate numbering Fast multi installation, Define multi installation Move options Manipulations Snap, Smart move Explode Stop manipulation on clash Assembly constrains Coincident, Contact constrain, Offset.

Angular, parallel, Perpendicular, Fix together, Quick constrain, Change constrain, Reuse pattern Assembly Features Split, Hole, Pocket, Add, Remove Symmetry in assembly.

5. DRAFTING AND DETAILING

Introduction on drafting Standards, Templates in drafting Creating the drawing Views Front view, Unfolded view, Projections, Auxiliary view, Isometric view, Advanced front view Sections Detail view, Clipping view, Broken view, View creation wizard Dimensions Dimensions, Chained dimensions, Cumulated dimensions

Stacked dimensions, Distance, Angular, Radius, Diameter, Chamfer dimensions, Thread dimensions, Coordinate dimensions, Hole dimension table and coordinate dimension table Dimension edition, Datum feature, Geometric tolerance Annotations Text, Text with leader, Balloon, Datum target, Text template replacement Symbols and Table creation Dress up Centre line. Area fill creations, Arrow Geometry creation Points, Lines, Circle and Ellipse, Profiles, Curves tools, Transformation tools, Constrains Generation Generate dimensions, Generate balloons, Bill of material generation Saving and Formats.

6. GENERATIVE SHEET METAL DESIGN

Introduction about sheet metal design Sheet metal parameters Walls-Wall, wall on edge, Extrusion Flange, Hem, Tear drop, User flange Recognize tool Rolled wall Hopper.

Free form surface, Rolled wall Bending Bend, Conical bend Bend from flat, Folding, Unfolding Point or curve mapping Cutting and stamping Pocket.

Hole, Circular cutout, corner relief, Fillet, Chamfer.

7. GENERATIVE SHAPE DESIGN

Wireframe Points, Points and plane repetition, Extemum and Extemum polar Line, Axis, Polyline Planes Projection.

Combine, Reflect line, Silhouette Parallel curve, Rolling offset, 3D offset Circle, and Corner. Connect curve, Conic Spline, Helix, Spiral, Curve from plane, Contour, Revolve, Sphere, Cylinder

Isoparametric curve Surfaces Extrude, Offset surfaces Sweeps and adaptive sweep Fill surfaces, Multisection surface. Blend surface Operations Join Split and Trim Extracts Shape fillets Chamfer Translate Extrapolate BIW templates Advance surfacing.

For Registration Kindly Contact:

Mr.J.Prakash, AP/Mech,

Faculty Incharge,COE-CRCPDT.

M:+91 9789565007, Mail:jpmech@kiot.ac.in

PRINCIPAL,
Knowledge Institute of Technology
Kakapalayam (PO) Salem - 637 504

KNOWLEDGE INSTITUTE OF TECHNOLOGY, SALEM-637504
DEPARTMENT OF MECHANICAL ENGINEERING
HARITA TECHSERV-CERTIFICATE COURSE
SOLID MODELING (LEVEL-1) USING NXCAD SOFTWARE
NAME LIST

S.NO	SEC	REG. NO	NAME	YEAR	Remarks
1	A	611216114004	ANBALAGAN P	III/VI	
2	B	611216114011	BHARATHI SHANKAR P	III/VI	
3	C	611216114023	DILIP V	III/VI	
4	C	611216114051	ILAYARAJA E	III/VI	
5	A	611216114052	IRSHAD AHMED S	III/VI	
6	C	611216114065	KEERTHIVASAN S	III/VI	
7	A	611216114066	KIRUPA SHANKAR V	III/VI	
8	A	611216114068	KISHOREKANNA R	III/VI	
9	C	611216114070	LINKESHWARAN H	III/VI	
10	A	611216114072	MADHANKUMAR G	III/VI	
11	B	611216114078	MOULEESWAR M	III/VI	
12	B	611216114079	MOUNRAJ P	III/VI	
13	A	611216114080	MOUREESWARAN M	III/VI	
14	C	611216114081	NAGARAJAN S	III/VI	
15	A	611216114087	NAVANEETHA KRISHNAN S R	III/VI	
16	B	611216114088	NAVEEN S	III/VI	
17	A	611216114089	NAVEENKUMAR B	III/VI	
18	A	611216114093	NAVEENPRASATH L	III/VI	
19	A	611216114094	NAVEENRAJ N	III/VI	
20	B	611216114095	NAVINRAJ N	III/VI	
21	A	611216114097	PARAMESWARAN M	III/VI	
22	C	611216114099	PAVITHRA K	III/VI	
23	C	611216114106	PRANESH C	III/VI	
24	C	611216114107	PRANESH D	III/VI	
25	B	611216114114	PRAVEEN KUMAR S	III/VI	
26	B	611216114115	PREMNATH C M	III/VI	
27	C	611216114116	RAGHAVI SHRI N.V	III/VI	
28	B	611216114119	RAJESH M	III/VI	
29	B	611216114122	RAVANTH R	III/VI	
30	B	611216114124	RINISHKUMAR L	III/VI	
31	C	611216114138	SENTHIL V	III/VI	
32	C	611216114140	SHANKAR V	III/VI	
33	D	611216114177	YUGESH KUMAR B	III/VI	
34	D	611216114302	ARAVINDKUMAR P	III/VI	
35	D	611216114309	DINESH KUMAR S	III/VI	

PRINCIPAL
Knowledge Institute of Technology
Kanjapalayam (PO) Salem - 637504

36	D	611216114312	GIRISHANKAR M	III/VI	
37	D	611216114315	GOKUL RAJ S	III/VI	
38	D	611216114319	GOWTHAMAN K M	III/VI	
39	D	611216114324	LAWRANCE M	III/VI	
40	D	611216114342	SANJAY G M	III/VI	
41	D	611216114348	SENTHILNATHAN B R	III/VI	
42	D	611216114353	TAMILARASU R	III/VI	

FACULTY INCHARGE

HOD

PRINCIPAL
Knowledge Institute of Technology
Kakkapalayam (PO) Salem - 6[illegible]

KNOWLEDGE INSTITUTE OF TECHNOLOGY, SALEM-637504
DEPARTMENT OF MECHANICAL ENGINEERING
HARITA TECHSERV-CERTIFICATE COURSE
SOLID MODELING (LEVEL-1) USING NXCAD SOFTWARE
TRAINING ATTENDANCE SHEET (22.01.2019 to 05.02.2019)

S.NO	SEC	REG. NO	NAME	YEAR	22.01.2019	23.01.2019	24.01.2019	25.01.2019	28.01.2019	29.01.2019
1	A	611216114004	ANBALAGAN P	III/VI	/	/	/	/	/	/
2	B	611216114011	BHARATHI SHANKAR P	III/VI	/	/	/	/	/	/
3	C	611216114023	DILIP V	III/VI	/	/	/	/	/	/
4	C	611216114051	ILAYARAJA E	III/VI	/	/	/	/	/	/
5	A	611216114052	IRSHAD AHMED S	III/VI	/	/	/	/	/	/
6	C	611216114065	KEERTHIVASAN S	III/VI	/	/	/	/	/	/
7	A	611216114066	KIRUPA SHANKAR V	III/VI	/	/	/	/	/	/
8	A	611216114068	KISHOREKANNA R	III/VI	/	/	/	/	/	/
9	C	611216114070	LINKESHWARAN H	III/VI	/	/	/	/	/	/
10	A	611216114072	MADHANKUMAR G	III/VI	/	/	/	/	/	/
11	B	611216114078	MOULEESWAR M	III/VI	/	/	/	/	/	/
12	B	611216114079	MOUNRAJ P	III/VI	/	/	/	/	/	/
13	A	611216114080	MOUREESWARAN M	III/VI	/	/	/	/	/	/
14	C	611216114081	NAGARAJAN S	III/VI	/	/	/	/	/	/
15	A	611216114087	NAVANEETHA KRISHNAN S R	III/VI	A	/	/	/	/	/
16	B	611216114088	NAVEEN S	III/VI	/	/	/	/	/	/
17	A	611216114089	NAVEENKUMAR B	III/VI	/	/	A	/	/	/
18	A	611216114093	NAVEENPRASATH L	III/VI	/	/	/	/	/	/
19	A	611216114094	NAVEENRAJ N	III/VI	/	/	/	/	/	/
20	B	611216114095	NAVINRAJ N	III/VI	/	/	/	/	/	/
21	A	611216114097	PARAMESWARAN M	III/VI	/	/	/	/	/	/
22	C	611216114099	PAVITHRA K	III/VI	/	/	/	/	/	/
23	C	611216114106	PRANESH C	III/VI	/	/	A	/	/	/
24	C	611216114107	PRANESH D	III/VI	/	/	/	/	/	/
25	B	611216114114	PRAVEEN KUMAR S	III/VI	/	/	/	/	A	/
26	B	611216114115	PREMNATH C M	III/VI	/	/	/	/	/	/
27	C	611216114116	RAGHAVI SHRI N.V	III/VI	/	/	/	/	/	/
28	B	611216114119	RAJESH M	III/VI	/	/	/	/	/	/
29	B	611216114122	RAVANTH R	III/VI	/	/	/	/	/	/
30	B	611216114124	RINISHKUMAR L	III/VI	/	/	/	/	/	/
31	C	611216114138	SENTHIL V	III/VI	/	/	/	/	/	/
32	C	611216114140	SHANKAR V	III/VI	/	/	/	/	/	/
33	D	611216114177	YUGESH KUMAR B	III/VI	A	/	/	/	/	/
34	D	611216114302	ARAVINDKUMAR P	III/VI	/	/	/	/	/	/
35	D	611216114309	DINESH KUMAR S	III/VI	/	/	/	/	/	/
36	D	611216114312	GIRISHANKAR M	III/VI	/	/	/	/	A	/
37	D	611216114315	GOKUL RAJ S	III/VI	/	/	/	/	/	/
38	D	611216114319	GOWTHAMAN K M	III/VI	/	/	/	/	/	/
39	D	611216114324	LAWRANCE M	III/VI	/	/	/	/	/	/
40	D	611216114342	SANJAY G M	III/VI	/	/	/	/	/	/
41	D	611216114348	SENTHILNATHAN B R	III/VI	/	/	/	/	/	/
42	D	611216114353	TAMILARASU R	III/VI	/	/	/	/	/	/
No. of Students Present					A0	A2	A0	A2	A0	A2
No. of Students Absent					02	—	02	—	02	—
Faculty Signature										

FACULTY INCHARGE

PRINCIPAL,
Knowledge Institute of Technology
Kakapalayam (PO) Salem - 637

HOD MECHANICAL

KNOWLEDGE INSTITUTE OF TECHNOLOGY, SALEM-637504
DEPARTMENT OF MECHANICAL ENGINEERING
HARITA TECHSERV-CERTIFICATE COURSE
SOLID MODELING (LEVEL-1) USING NXCAD SOFTWARE
TRAINING ATTENDANCE SHEET (22.01.2019 to 05.02.2019)

S.NO	SEC	REG. NO	NAME	YEAR	30.01.2019	31.01.2019	01.02.2019	04.02.2019	05.02.2019
1	A	611216114004	ANBALAGAN P	III/VI	✓	✓	✓	✓	✓
2	B	611216114011	BHARATHI SHANKAR P	III/VI	✓	✓	✓	✓	✓
3	C	611216114023	DILIP V	III/VI	✓	✓	✓	✓	✓
4	C	611216114051	ILAYARAJA E	III/VI	✓	✓	✓	✓	✓
5	A	611216114052	IRSHAD AHMED S	III/VI	✓	✓	✓	✓	✓
6	C	611216114065	KEERTHIVASAN S	III/VI	✓	✓	✓	✓	✓
7	A	611216114066	KIRUPA SHANKAR V	III/VI	✓	✓	✓	✓	✓
8	A	611216114068	KISHOREKANNA R	III/VI	✓	✓	✓	✓	✓
9	C	611216114070	LINKESHWARAN H	III/VI	✓	✓	✓	✓	✓
10	A	611216114072	MADHANKUMAR G	III/VI	✓	✓	✓	✓	✓
11	B	611216114078	MOULEESWAR M	III/VI	✓	✓	✓	✓	✓
12	B	611216114079	MOUNRAJ P	III/VI	✓	✓	✓	✓	✓
13	A	611216114080	MOUREESWARAN M	III/VI	✓	✓	✓	✓	✓
14	C	611216114081	NAGARAJAN S	III/VI	✓	✓	✓	✓	✓
15	A	611216114087	NAVANEETHA KRISHNAN S R	III/VI	✓	✓	✓	✓	✓
16	B	611216114088	NAVEEN S	III/VI	✓	✓	✓	✓	✓
17	A	611216114089	NAVEENKUMAR B	III/VI	✓	✓	✓	✓	✓
18	A	611216114093	NAVEENPRASATH L	III/VI	✓	✓	✓	✓	✓
19	A	611216114094	NAVEENRAJ N	III/VI	✓	✓	✓	✓	✓
20	B	611216114095	NAVINRAJ N	III/VI	✓	✓	✓	✓	✓
21	A	611216114097	PARAMESWARAN M	III/VI	✓	✓	✓	✓	✓
22	C	611216114099	PAVITHRA K	III/VI	✓	✓	✓	✓	✓
23	C	611216114106	PRANESH C	III/VI	✓	✓	✓	✓	✓
24	C	611216114107	PRANESH D	III/VI	✓	✓	✓	✓	✓
25	B	611216114114	PRAVEEN KUMAR S	III/VI	✓	✓	✓	✓	✓
26	B	611216114115	PREMNATH C M	III/VI	✓	✓	✓	✓	✓
27	C	611216114116	RAGHAVI SHRI N.V	III/VI	✓	✓	✓	✓	✓
28	B	611216114119	RAJESH M	III/VI	✓	✓	✓	✓	✓
29	B	611216114122	RAVANTH R	III/VI	✓	✓	✓	✓	✓
30	B	611216114124	RINISHKUMAR L	III/VI	✓	✓	✓	✓	✓
31	C	611216114138	SENTHIL V	III/VI	✓	✓	✓	✓	✓
32	C	611216114140	SHANKAR V	III/VI	✓	✓	✓	✓	✓
33	D	611216114177	YUGESH KUMAR B	III/VI	✓	✓	✓	✓	✓
34	D	611216114302	ARAVINDKUMAR P	III/VI	✓	✓	✓	✓	✓
35	D	611216114309	DINESH KUMAR S	III/VI	✓	✓	✓	✓	✓
36	D	611216114312	GIRISHANKAR M	III/VI	✓	✓	✓	✓	✓
37	D	611216114315	GOKUL RAJ S	III/VI	✓	✓	✓	✓	✓
38	D	611216114319	GOWTHAMAN K M	III/VI	✓	✓	✓	✓	✓
39	D	611216114324	LAWRANCE M	III/VI	✓	✓	✓	✓	✓
40	D	611216114342	SANJAY G M	III/VI	✓	✓	✓	✓	✓
41	D	611216114348	SENTHILNATHAN B R	III/VI	✓	✓	✓	✓	✓
42	D	611216114353	TAMILARASU R	III/VI	✓	✓	✓	✓	✓
No. of Students Present					40	42	41	42	42
No. of Students Absent					2	-	1	-	-
Faculty Signature									

FACULTY INCHARGE

PRINCIPAL,
Knowledge Institute of Technology
Kakkapalayam (PO), Salem - 637 504

HOD MECHANICAL

KNOWLEDGE INSTITUTE OF TECHNOLOGY, SALEM
Department Of Mechanical Engineering

EVALUATION FORM-CERTIFICATE COURSE

Solid Modeling (Level-1) using CATIA & NXCAD software

Name: S. IRSHADAHMED	Reg. No: 611216114052	Year/Sem/Sec: III / VI

ASSESSMENT TEST

S.NO.	DESCRIPTION	MARKS ALLOTED	MARKS OBTAINED
1	PART-A (SKETCHER)	50	40
2	PART-B (PART DESIGN)	50	40
TOTAL MARKS		100	80

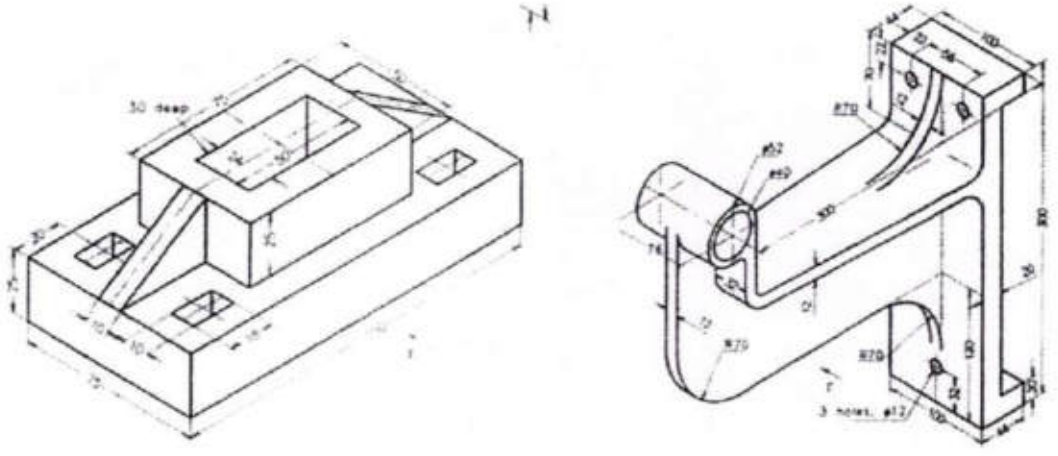

PRINCIPAL,
Knowledge Institute of Technology
Kakapalayam (PO) Salem - 53

KNOWLEDGE INSTITUTE OF TECHNOLOGY, SALEM
Department Of Mechanical Engineering

EVALUATION FORM-CERTIFICATE COURSE

Solid Modeling (Level-1) using CATIA & NXCAD software

Name: P.Kirpashankar | Reg. No: 611216114066 | Year/Sem/Sec: III / VI

ASSESSMENT TEST

S.NO.	DESCRIPTION	MARKS ALLOTED	MARKS OBTAINED
1	PART-A (SKETCHER)	50	45
2	PART-B (PART DESIGN)	50	45
TOTAL MARKS		100	90

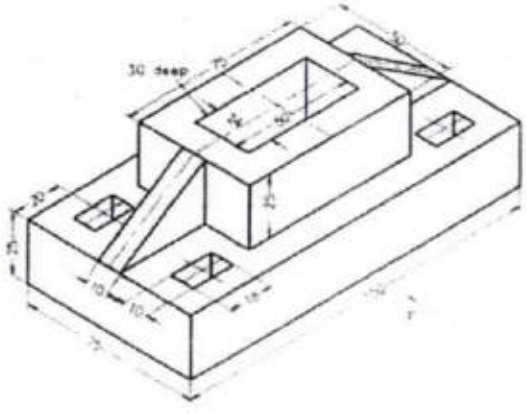

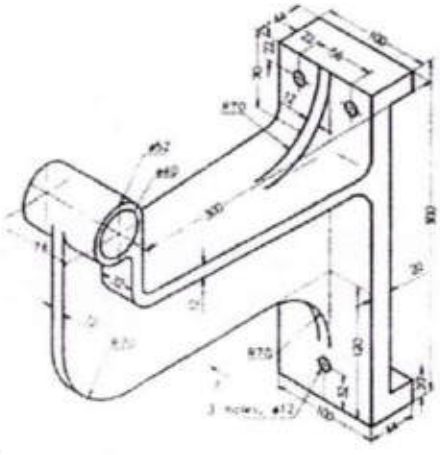

PRINCIPAL,
Knowledge Institute of Technology
Kakapalayam (PO) Salem - 637 504

KNOWLEDGE INSTITUTE OF TECHNOLOGY, SALEM

Department Of Mechanical Engineering

EVALUATION FORM-CERTIFICATE COURSE

Solid Modeling (Level-1) using CATIA & NXCAD software

Name: G. Madhan Kumar	Reg. No: 6421644072	Year/Sem/Sec: III VI

ASSESSMENT TEST

S.NO.	DESCRIPTION	MARKS ALLOTED	MARKS OBTAINED
1	PART-A (SKETCHER)	50	45
2	PART-B (PART DESIGN)	50	40
TOTAL MARKS		100	95

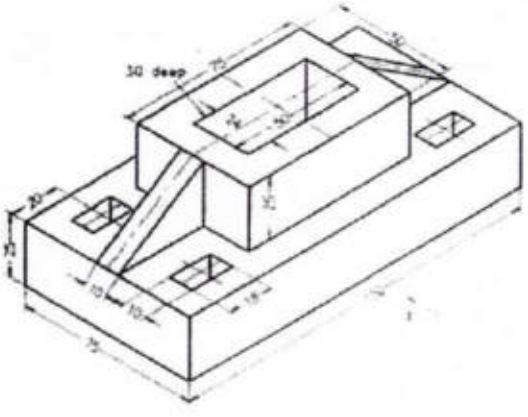

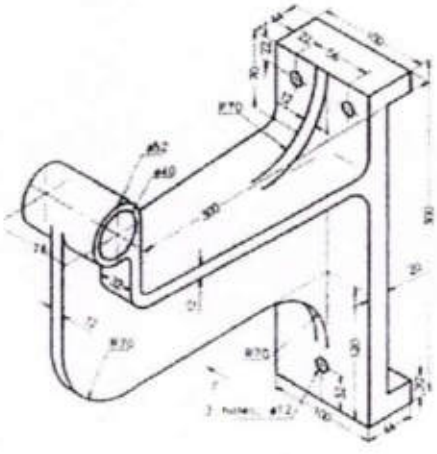

PRINCIPAL,
Knowledge Institute of Technology,
Kakapalayam (PO) Salem

KNOWLEDGE INSTITUTE OF TECHNOLOGY, SALEM

Department Of Mechanical Engineering

EVALUATION FORM-CERTIFICATE COURSE

Solid Modeling (Level-1) using CATIA & NXCAD software

Name:	Reg. No:	Year/Sem/Sec:
NanoRaj.N	611216114095	III / VI

ASSESSMENT TEST

S.NO.	DESCRIPTION	MARKS ALLOTED	MARKS OBTAINED
1	PART-A (SKETCHER)	50	35
2	PART-B (PART DESIGN)	50	35
TOTAL MARKS		100	70

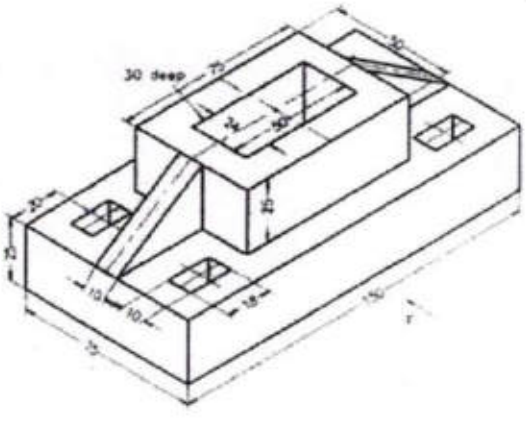

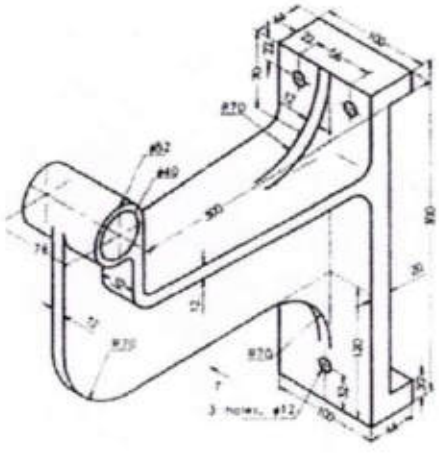

PRINCIPAL,
Knowledge Institute of Technology
Kakapalayam (PO), Salem - 637

KNOWLEDGE INSTITUTE OF TECHNOLOGY, SALEM
Department Of Mechanical Engineering

EVALUATION FORM-CERTIFICATE COURSE

Solid Modeling (Level-1) using CATIA & NXCAD software

Name: Parameswaran.M	Reg. No: 6W216114097	Year/Sem/Sec: III / VI

ASSESSMENT TEST

S.NO.	DESCRIPTION	MARKS ALLOTED	MARKS OBTAINED
1	PART-A (SKETCHER)	50	50
2	PART-B (PART DESIGN)	50	40
	TOTAL MARKS	100	90

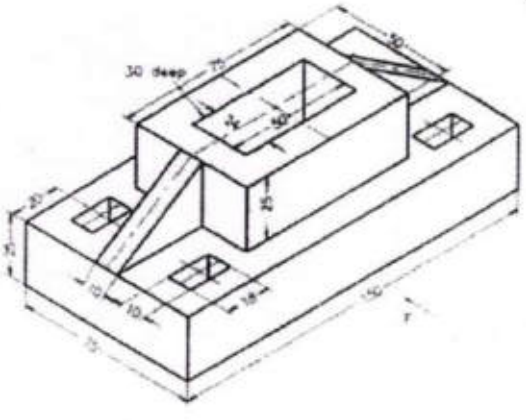

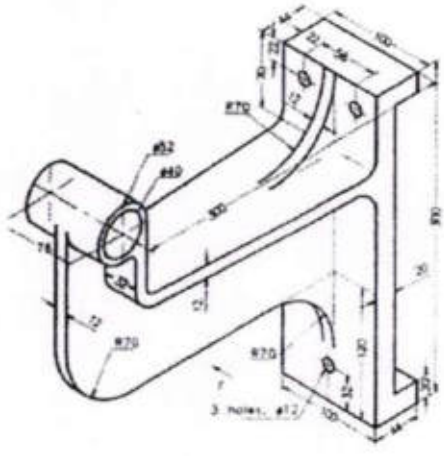

PRINCIPAL,
Knowledge Institute of Technology
Kakapalayam (PO) Salem - 637 504

KNOWLEDGE INSTITUTE OF TECHNOLOGY, SALEM-637504
DEPARTMENT OF MECHANICAL ENGINEERING
HARITA TECHSERV-CERTIFICATE COURSE
SOLID MODELING (LEVEL-1) USING NXCAD SOFTWARE
EVALUATION MARKS

05.02.19

S.NO	SEC	REG. NO	NAME	YEAR	MARKS (100)
1	A	611216114004	ANBALAGAN P	III/VI	95
2	B	611216114011	BHARATHI SHANKAR P	III/VI	90
3	C	611216114023	DILIP V	III/VI	60
4	C	611216114051	ILAYARAJA E	III/VI	65
5	A	611216114052	IRSHAD AHMED S	III/VI	80
6	C	611216114065	KEERTHIVASAN S	III/VI	95
7	A	611216114066	KIRUPA SHANKAR V	III/VI	90
8	A	611216114068	KISHOREKANNA R	III/VI	90
9	C	611216114070	LINKESHWARAN H	III/VI	90
10	A	611216114072	MADHANKUMAR G	III/VI	95
11	B	611216114078	MOULEESWAR M	III/VI	65
12	B	611216114079	MOUNRAJ P	III/VI	70
13	A	611216114080	MOUREESWARAN M	III/VI	85
14	C	611216114081	NAGARAJAN S	III/VI	70
15	A	611216114087	NAVANEETHA KRISHNAN S R	III/VI	70
16	B	611216114088	NAVEEN S	III/VI	85
17	A	611216114089	NAVEENKUMAR B	III/VI	95
18	A	611216114093	NAVEENPRASATH L	III/VI	70
19	A	611216114094	NAVEENRAJ N	III/VI	65
20	B	611216114095	NAVINRAJ N	III/VI	70
21	A	611216114097	PARAMESWARAN M	III/VI	90
22	C	611216114099	PAVITHRA K	III/VI	85
23	C	611216114106	PRANESH C	III/VI	80
24	C	611216114107	PRANESH D	III/VI	65
25	B	611216114114	PRAVEEN KUMAR S	III/VI	70
26	B	611216114115	PREMNATH C M	III/VI	75
27	C	611216114116	RAGHAVI SHRI N.V	III/VI	85
28	B	611216114119	RAJESH M	III/VI	90
29	B	611216114122	RAVANTH R	III/VI	90
30	B	611216114124	RINISHKUMAR L	III/VI	60
31	C	611216114138	SENTHIL V	III/VI	65
32	C	611216114140	SHANKAR V	III/VI	75
33	D	611216114177	YUGESH KUMAR B	III/VI	70
34	D	611216114302	ARAVINDKUMAR P	III/VI	60
35	D	611216114309	DINESH KUMAR S	III/VI	65

PRINCIPAL
Knowledge Institute of Technology
Kakapalayam (PO) Salem - 637504

05.02.19

36	D	611216114312	GIRISHANKAR M	III/VI	55
37	D	611216114315	GOKUL RAJ S	III/VI	50
38	D	611216114319	GOWTHAMAN K M	III/VI	65
39	D	611216114324	LAWRANCE M	III/VI	75
40	D	611216114342	SANJAY G M	III/VI	70
41	D	611216114348	SENTHILNATHAN B R	III/VI	65
42	D	611216114353	TAMILARASU R	III/VI	90

FACULTY INCHARGE

HOD

PRINCIPAL
Knowledge Institute of Technology
Kakapalayam (PO) Salem - 6

KNOWLEDGE INSTITUTE OF TECHNOLOGY
Accredited by NAAC

HARITA TECHSERV LIMITED

Certificate of Completion

This certificate is awarded to

ANBALGAN.P (611216114004)

In recognition of sucessful completion of

"Solid Modeling (Level-1) using NXCAD software"

PRINCIPAL,
Knowledge Institute of Technology
Kakapalayam (PO) Salem - 637 504

Conducted by "CRCPDT-Harita Techserv Limited" from 22.01.2019 to 05.02.2019
Department of Mechanical Engineering, Knowledge Institute of Technology salem, Tamilnadu, India

Mr.M.Sathyanathan	Dr.K.Visagavel	Dr.PSS.Srinivasan	R.Shankarnarayanan
Coordinator	HOD/Mechanical	Principal	COO/Harita Techserv Limited

KNOWLEDGE INSTITUTE OF TECHNOLOGY
Accredited by NAAC

HARITA TECHSERV LIMITED

Certificate of Completion

This certificate is awarded to

DILIP.V (611216114023)

In recognition of sucessful completion of

"Solid Modeling (Level-1) using NXCAD software"

PRINCIPAL
Knowledge Institute of Technology
Kakapalayam (PO) Salem - 637 504

Conducted by "CRCPDT-Harita Techserv Limited" from 22.01.2019 to 05.02.2019 Department of Mechanical Engineering, Knowledge Institute of Technology salem, Tamilnadu, India

Mr.M.Sathyanathan	Dr.K.Visagavel	Dr.PSS.Srinivasan	R.Shankarnarayanan
Coordinator	HOD/Mechanical	Principal	COO/Harita Techserv Limited

KNOWLEDGE INSTITUTE OF TECHNOLOGY
Accredited by NAAC

HARITA TECHSERV LIMITED

Certificate of Completion

This certificate is awarded to

MOUNRAJ.P (611216114079)

In recognition of sucessful completion of

"Solid Modeling (Level-1) using NXCAD software"

PRINCIPAL,
Knowledge Institute of Technology
Kakapalayam (PO) Salem - 637 504

Conducted by "CRCPDT-Harita Techserv Limited" from 22.01.2019 to 05.02.2019
Department of Mechanical Engineering, Knowledge Institute of Technology salem, Tamilnadu, India

Mr.M.Sathyanathan	Dr.K.Visagavel	Dr.PSS.Srinivasan	R.Shankarnarayanan
Coordinator	HOD/Mechanical	Principal	COO/Harita Techserv Limited

KNOWLEDGE INSTITUTE OF TECHNOLOGY
Accredited by NAAC

HARITA TECHSERV LIMITED

Certificate of Completion

This certificate is awarded to

SANJAY.G.M (611216114342)

In recognition of sucessful completion of

"Solid Modeling (Level-1) using NXCAD software"

PRINCIPAL,
Knowledge Institute of Technology
Kakapalayam (PO) Salem - 637 504

Conducted by "CRCPDT-Harita Techserv Limited" from 22.01.2019 to 05.02.2019
Department of Mechanical Engineering, Knowledge Institute of Technology salem, Tamilnadu, India

Mr.M.Sathyanathan	Dr.K.Visagavel	Dr.PSS.Srinivasan	R.Shankarnarayanan
Coordinator	HOD/Mechanical	Principal	COO/Harita Techserv Limited

KNOWLEDGE INSTITUTE OF TECHNOLOGY, SALEM
Department Of Mechanical Engineering

FEEDBACK FORM-CERTIFICATE COURSE

Solid Modeling (Level-1) using NXCAD/CATIA software

Name: D. Ramesh Year/Sem/Sec: III VI

S.No.	List of Content	Strongly Agree	Agree	Neutral	Disagree	Strongly Disagree
1	About Introduction to CATIA V5	✓				
2	Sketcher Workbench		✓			
3	Part Modeling	✓				
4	Assembly Design		✓			
5	Course content and Hands on Experience of CATIA V5	✓				
6	Trainer Explanation level about this course		✓			
7	Have you learned Shortcuts of the Tool and worked out Industry Drawings	✓				
8	Overall Experience about this course		✓			

Suggestion for Improvement

Signature of the Candidate

PRINCIPAL
Knowledge Institute of Technology
Kakapalayam (PO) Salem - 637 504

KNOWLEDGE INSTITUTE OF TECHNOLOGY, SALEM
Department Of Mechanical Engineering

FEEDBACK FORM-CERTIFICATE COURSE
Solid Modeling (Level-1) using NXCAD/CATIA software

Name: R. Ravanthr. Year/Sem/Sec:

S.No.	List of Content	Strongly Agree	Agree	Neutral	Disagree	Strongly Disagree
1	About Introduction to CATIA V5	✓				
2	Sketcher Workbench	✓				
3	Part Modeling	✓				
4	Assembly Design	✓				
5	Course content and Hands on Experience of CATIA V5	✓				
6	Trainer Explanation level about this course	✓				
7	Have you learned Shortcuts of the Tool and worked out Industry Drawings		✓			
8	Overall Experience about this course	✓				

Suggestion for Improvement

Signature of the Candidate

PRINCIPAL,
Knowledge Institute of Technology
Kakapalayam (PO) Salem - 637 504

From

J.Prakash,
Assistant Professor
Department of Mechanical Engineering,
Knowledge Institute of Technology,
Salem.

To

The Principal,
Knowledge Institute of Technology,
Salem .

Through: Head of the Department, Department of Mechanical Engineering

Respected Sir,

Sub: Certification Course conduction–regarding

Composite research Centre for Product Design, Digital Manufacturing and Technical Documentation (CRCPDT) and Designers club is jointly organizing Solid Modeling (Level-1) using CATIA & NXCAD software. In this regard, I request your permission to execute the Certificate course for Mechanical Engineering students.

Thanking You

Salem

09.01.2019

Yours Faithfully

J.Prakash

Forwarded to the Principal

HOD
Permitted

PRINCIPAL,
Knowledge Institute of Technology
Kakapalayam (PO) Salem - 637 504

KNOWLEDGE INSTITUTE OF TECHNOLOGY, SALEM - 637 504			
CIRCULAR			
Circular No.		**Date**	**09.01.2019**
To	IV-Year students		
Subject	Solid Modeling (Level-1) using CATIA & NXCAD software		
Circular issued by	Center of Excellence – CRCPDT & Designers Club, Department of Mechanical Engineering.		

This is to inform you that Center of Excellence – Composite Research Centre for Product Design, Digital Manufacturing and Technical Documentation (CRCPDT) & Designers Club has planned to conduct Solid Modeling (Level-1) using CATIA & NXCAD software for III and II year students. Registered students are requested to attend the program as per the given schedule.

SL. NO.	NAME OF THE PROGRAM	VENUE DATE & TIME	RESOURCE PERSON
1	Solid Modeling (Level-1) using CATIA & NXCAD software	COE – CRCPDT, A-Block, KIOT. 22.01.2019 TO 05.02.2019	Mr.S.Santhosh Mr.K.V.Rangasamy AP, Mecahanical Engg. KIOT

For Further Details Kindly Contact: Mr.J.Prakash, AP/Mech, Faculty Incharge, COE-CRCPDT. M:+91 9789565007

J. Prakash		
Faculty I/c	HOD	PRINCIPAL

PRINCIPAL
Knowledge Institute of Technology
Kakapalayam (PO) Salem - 637 504

KNOWLEDGE INSTITUTE OF TECHNOLOGY, SALEM – 637 504
Approved by AICTE, Affiliated to Anna University, Chennai.

Report of Program / Event Conducted

Name of the Program / Event		Solid Modeling (Level-1) using CATIA & NXCAD software	
Resource Person details		Mr..S.SANTHOSH & Mr. Mr.K.V.RANGASAMY Assistant Professor, Dept. of Mechanical Engg. KIOT	
Organizing Dept. / Cell	Mechanical	Details of Participant	IV Students = 94
Date, Time and Venue	22.01.2019-05.02.2019 COE – CRCPDT, A-Block, KIOT.		

Description of the program

1. He discussed about 4 features of CATIA & NXCAD software. It contains CATIA & NXCAD basic level.
2. He explained about Introduction sketcher workbench, part modeling and assembly design.
3. Also he explained about Geometric Dimensioning and Tolerancing (GD&T).
4. He shared his personal experiences and difficulties he faced in his Industrial Career.

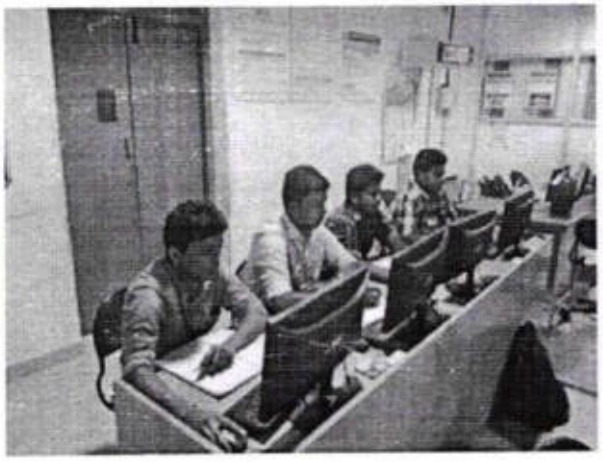

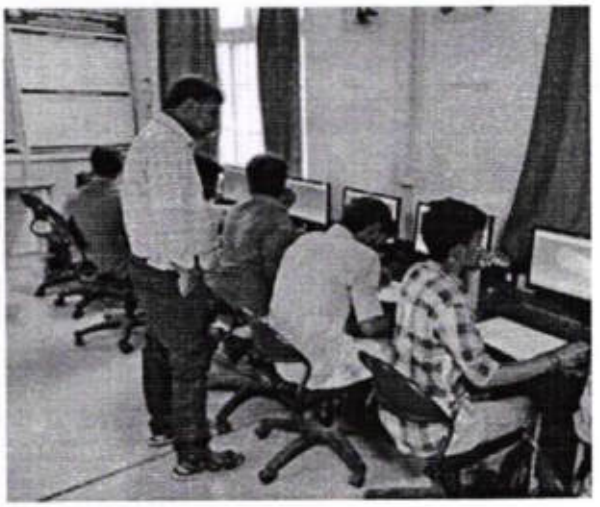

Principal,
Knowledge Institute of Technology
Kakapalayam (Po), Salem-637

Certificate Course
on
Solid Modeling (Level-1)
using CATIA software

22.01.2019 to 05.02.2019

Organized by

Department of Mechanical Engineering

KNOWLEDGE
INSTITUTE OF TECHNOLOGY

(Accredited by NAAC)

KIOT campus, Kakapalayam (PO), Salem-637 504,
Tamil Nadu, India.
www.kiot.ac.in

in association with

DASSAULT SYSTEMES

Harita TECHSERV

PRINCIPAL,
Knowledge Institute of Technology
Kakapalayam (PO) Salem - 637 504

About KIOT

KIOT is one of the best engineering institutes in Salem. It is approved by AICTE, New Delhi, affiliated to Anna University, Chennai and offers 5 UG Programs (Mech., Civil, EEE, ECE and CSE), 4 PG Programs (ISE, CSE, EST and VLSI Design) and 2 Ph.D. programs (Mech. and IC Engg.). KIOT is accredited by NAAC In the single window counselling (TNEA 2018) seats of KIOT were filled in 62nd position among more than 500 self-financing engineering colleges. KIOT is known for its placement of students in well reputed organisations. KIOT has been rated one among the top 3 institutions across India in AICTE-CII Survey of Industry Linked Technical institutions-2016 under the category of emerging engineering colleges. KIOT was recognised nationally by ISTE in awarding Best Engineering College Principal Award to Dr.PSS.Srinivasan, Principal, KIOT. The college has 17 industry linked labs, Research Centres and COEs. KIOT faculty have published 200+ papers in conference and 250+ Research Papers in reputed journals in the last 3 years. We also offer MBA programme at Knowledge Business School, Salem (KBSS), a sister institution of KIOT.

About the Department

Vision: To create competent and industry relevant Mechanical Engineers with professional and social values to meet global challenges.

Mission:

- Enabling environment for effective teaching - learning and research to meet global challenges.
- Motivating students to pursue higher education and to excel in competitive examinations and entrepreneurship.
- Establish a continuous Industry Institute Interaction to make the students employable.
- Inculcate the students leadership quality with ethical values and spirit of team work.

Mechanical Engineering program, accredited by NBA, is one of the vibrant departments of KIOT and offers B.E Mechanical Engineering, M.E Industrial Safety Engineering & Ph.D. programmes. The Department was awarded with platinum ranking in AICTE-CII Survey of Industry Linked Technical Institutions-2016. Dr.K.Visagavel, The Department has a team of dedicated faculty members with 5 Ph.D. The Department has established industrial collaborative research centres with Harita Techserv Pvt. Ltd. and IAPMO (International Association of Plumbing and Mechanical Officials).

SYLLABUS

1.Introduction to CATIA V5

Introduction About CATIA V5, History of CATIA, CATIA modeling process, Parametric design concept, feature based design. About PLM, CATIA Features, SKETCHER, Creating the new part.

2.SKETCHER WORKBENCH

Basic sketch, Sketch in task environment, Selection tools, Profile, Predefined shapes, Circles, Spline, Conics, Line, Points,

Operations, Corner, Chamfer, Projections, Transformations.

Constrains, Constrain dialogue box, Constrains, Fix together, Animate constrain, Edit multi constrain, Sketch tools, Grid, Snap on grid, Construction. Geometrical constrains, Dimensional constrains., Sketch analysis Visualization tools, View tool bar, Workbench.

3.PART MODELING

Sketch based features Pad, Multipad, Drafted filleted pad. Pocket, Multipocket, Drafted filleted pocket Shafts, groove Holes Rib, Slots Solid combine, Stiffner.

Multi section solid, Multi section solid removal Edit Geometry, Parent child relationship, copy & paste features, Dress up features -Edge fillet, Variable radius fillet, Face to face fillet, Tri tangent fillet Chamfer Drafts.

Drafted reflected line, Variable angle draft Shell feature, Thicken Thread, Remove face, Replace face Transformation Features-Translation, Rotation, Symmetry, Axis to axis Mirror, Pattern-Rectangular.

Circular, User defined Design table, Power copy, Functions and relations, Catalog Scaling-Scale, Affinity Reference elements- Point, Axis, Planes, Boolean operations- Assemble, Add, Remove, Intersect, Union trim.

4. ASSEMBLY DESIGN

Introduction on assembly Assembly approaches-Top down assembly, Bottom up assembly Product structure tools Component, Product, Part Existing component, Existing component with positioning Replace component.

Graph tree reordering, Generate numbering Fast multi installation, Define multi installation Move options Manipulations Snap, Smart move Explode Stop manipulation on clash Assembly constrains Coincident, Contact constrain, Offset.

Angular, parallel, Perpendicular, Fix together, Quick constrain, Change constrain, Reuse pattern Assembly Features Split, Hole, Pocket, Add, Remove Symmetry in assembly.

5. DRAFTING AND DETAILING

Introduction on drafting Standards, Templates in drafting Creating the drawing Views Front view, Unfolded view, Projections, Auxiliary view, Isometric view, Advanced front view Sections Detail view, Clipping view, Broken view, View creation wizard Dimensions Dimensions, Chained dimensions, Cumulated dimensions

Stacked dimensions, Distance, Angular, Radius, Diameter, Chamfer dimensions, Thread dimensions, Coordinate dimensions, Hole dimension table and coordinate dimension table Dimension edition, Datum feature, Geometric tolerance Annotations Text, Text with leader, Balloon, Datum target, Text template replacement Symbols and Table creation Dress up Centre line. Area fill creations, Arrow Geometry creation Points, Lines, Circle and Ellipse, Profiles, Curves tools, Transformation tools, Constrains Generation Generate dimensions, Generate balloons, Bill of material generation Saving and Formats.

6. GENERATIVE SHEET METAL DESIGN

Introduction about sheet metal design Sheet metal parameters Walls-Wall, wall on edge, Extrusion Flange, Hem, Tear drop, User flange Recognize tool Rolled wall Hopper.

Free form surface, Rolled wall Bending Bend, Conical bend Bend from flat, Folding, Unfolding Point or curve mapping Cutting and stamping Pocket.

Hole, Circular cutout, corner relief, Fillet, Chamfer.

7. GENERATIVE SHAPE DESIGN

Wireframe Points, Points and plane repetition, Extemum and Extemum polar Line, Axis, Polyline Planes Projection.

Combine, Reflect line, Silhouette Parallel curve, Rolling offset, 3D offset Circle, and Corner. Connect curve, Conic Spline, Helix, Spiral, Curve from plane, Contour, Revolve, Sphere, Cylinder

Isoparametric curve Surfaces Extrude, Offset surfaces Sweeps and adaptive sweep Fill surfaces, Multisection surface. Blend surface Operations Join Split and Trim Extracts Shape fillets Chamfer Translate Extrapolate BIW templates Advance surfacing.

For Registration Kindly Contact:
Mr.J.Prakash, AP/Mech,
Faculty Incharge,COE-CRCPDT.
M:+91 9789565007, Mail:jpmech@kiot.ac.in

PRINCIPAL,
(Knowledge Institute of Technology
Kanjalavam (PO) Salem - 637 504

KNOWLEDGE INSTITUTE OF TECHNOLOGY Department of Mechanical Engineering Course Plan			
Name of the COE	Composite Research Centre for Product Design, Digital Manufacturing and Technical Documentation (CRCPDT)		
Name of the Course	CATIA V5		
Solid Modeling (Level-1) using CATIA software	04	Number of Hours	32 hours
Solid Modeling (Level-1) using CATIA software	03	Number of Hours	32 hours

EXECUTION SCHEDULE

Module No.	Name of the Module	No. of Hours
1	Introduction to CATIA V5	02
2	Sketcher Workbench	06
3	Part Modeling	12
4	Assembly Design	12
5	Drafting and Detailing	08
6	Generative Sheet metal Design	12
7	Generative Shape Design	12

PRINCIPAL,
Knowledge Institute of Technology
Kakapalayam (PO) Salem - 637 504

Detailed Execution Plan

Name of the Course Module: 1.Introduction to CATIA V5

Duration: 02 hours

Module No.	Name of the Module	Teaching Hours	Practical Hours	Self-Study Hours	Course Plan (Day wise)
1	Introduction About CATIA V5, History of CATIA, CATIA modeling process, Parametric design concept, feature based design. About PLM, CATIA Features, SKETCHER, Creating the new part.	1	1	-	Day 1

Detailed Execution Plan

Name of the Course Module: 2.SKETCHER WORKBENCH

Duration: 06

Module No.	Name of the Module	Teaching Hours	Practical Hours	Self-Study Hours	Course Plan (Day wise)
2.1	Basic sketch, Sketch in task environment, Selection tools, Profile, Predefined shapes, Circles, Spline, Conics, Line, Points, Operations, Corner, Chamfer, Projections, Transformations.	1	2	-	Day 2
2.2	Constrains, Constrain dialogue box, Constrains, Fix together, Animate constrain, Edit multi constrain, Sketch tools, Grid, Snap on grid, Construction. Geometrical constrains, Dimensional constrains., Sketch analysis Visualization tools, View tool bar, Workbench.	1	2	-	Day 3

PRINCIPAL,
Knowledge Institute of Technology
Kakapalayam (PO) Salem - 637 504

Detailed Execution Plan

Name of the Course Module: 4. Assembly Design

Duration: 12

Module No.	Name of the Module	Teaching Hours	Practical Hours	Self-Study Hours	Course Plan (Day wise)
4.1	Introduction on assembly Assembly approaches-Top down assembly, Bottom up assembly Product structure tools Component, Product, Part Existing component, Existing component with positioning Replace component.	1	2	-	Day 8
4.2	Graph tree reordering, Generate numbering Fast multi installation, Define multi installation Move options Manipulations Snap	1	2	-	Day 9
4.3	Smart move Explode Stop manipulation on clash Assembly constrains Coincident, Contact constrain, Offset. Angular, parallel, Perpendicular, Fix together, Quick constrain, Change constrain,	1	2	-	Day 10
4.4	Reuse pattern Assembly Features Split, Hole, Pocket, Add, Remove Symmetry in assembly.	1	2		Day 11

Detailed Execution Plan

Name of the Course Module: 5. Drafting and Detailing

Duration: 08

Module No.	Name of the Module	Teaching Hours	Practical Hours	Self-Study Hours	Course Plan (Day wise)
	Introduction on drafting Standards, Templates in drafting Creating the drawing Views Front view, Unfolded view, Projections, Auxiliary view, Isometric view,	1	1	-	Day 1

PRINCIPAL,
Knowledge Institute of Technology
Kakapalayam (PO), Salem - 6

Detailed Execution Plan					
Name of the Course Module: 3.PART MODELING Duration: 12					
Module No.	**Name of the Module**	**Teaching Hours**	**Practical Hours**	**Self-Study Hours**	**Course Plan (Day wise)**
3.1	Sketch based features Pad, Multipad, Drafted filleted pad. Pocket, Multipocket, Drafted filleted pocket Shafts, groove Holes Rib, Slots Solid combine, Stiffner.	1	2	-	Day 4
3.2	Multi section solid, Multi section solid removal Edit Geometry, Parent child relationship, copy & paste features, Dress up features -Edge fillet, Variable radius fillet, Face to face fillet, Tri tangent fillet Chamfer Drafts.	1	2		Day 5
3.3	Drafted reflected line, Variable angle draft Shell feature, Thicken Thread, Remove face, Replace face Transformation Features- Translation, Rotation, Symmetry, Axis to axis Mirror, Pattern- Rectangular.	1	2	-	Day 6
3.4	Circular, User defined Design table, Power copy, Functions and relations, Catalog Scaling- Scale, Affinity Reference elements- Point, Axis, Planes, Boolean operations- Assemble, Add, Remove, Intersect, Union trim.	1	2	-	Day 7

PRINCIPAL
Knowledge Institute of Technology
Kakapalayam (PO) Salem - 637 504

5.1	Advanced front view Sections Detail view, Clipping view, Broken view, View creation wizard Dimensions Dimensions, Chained dimensions, Cumulated dimensions.				
5.2	Stacked dimensions, Distance, Angular, Radius, Diameter, Chamfer dimensions, Thread dimensions, Coordinate dimensions, Hole dimension table and coordinate dimension table Dimension edition, Datum feature	1	2	-	Day 2
5.3	Geometric tolerance Annotations Text, Text with leader, Balloon, Datum target, Text template replacement Symbols and Table creation Dress up Centre line. Area fill creations, Arrow Geometry creation Points, Lines, Circle and Ellipse, Profiles, Curves tools, Transformation tools, Constrains Generation Generate dimensions, Generate balloons, Bill of material generation Saving and Formats.	1	2	-	Day 3

Detailed Execution Plan

Name of the Course Module: 6. Generative Sheet metal Design

Duration: 12

Module No.	Name of the Module	Teaching Hours	Practical Hours	Self-Study Hours	Course Plan (Day wise)
6.1	Introduction about sheet metal design Sheet metal parameters Walls-Wall, wall on edge	1	2	-	Day 4
6.2	Extrusion Flange, Hem, Tear drop, User flange Recognize tool Rolled wall Hopper. Free form surface	1	2	-	Day 5

PRINCIPAL,
Knowledge Institute of Technology
Kakapalayam (PO) Salem - 637 504

6.3	Rolled wall Bending Bend, Conical bend Bend from flat, Folding, Unfolding Point	1	2	-	Day 6
6.4	Curve mapping Cutting and stamping Pocket Hole, Circular cutout, corner relief, Fillet, Chamfer.	1	2	-	Day 7

Detailed Execution Plan

Name of the Course Module: 7. Generative Shape Design

Duration: 12

Module No.	Name of the Module	Teaching Hours	Practical Hours	Self-Study Hours	Course Plan (Day wise)
7.1	Wireframe Points, Points and plane repetition, Extemum and Extemum polar Line, Axis, Polyline Planes Projection.	1	2	-	Day 8
7.2	Combine, Reflect line, Silhouette Parallel curve, Rolling offset, 3D offset Circle, and Corner. Connect curve, Conic Spline, Helix, Spiral, Curve from plane, Contour, Revolve, Sphere, Cylinder	1	2	-	Day 9
7.3	Isoparametric curve Surfaces Extrude, Offset surfaces Sweeps and adaptive sweep Fill surfaces, Multisection surface.	1	2	-	Day 10
7.4	Blend surface Operations Join Split and Trim Extracts Shape fillets Chamfer Translate Extrapolate BIW templates Advance surfacing.	1	2		Day 11

FACULTY I/c

HOD MECH

PRINCIPAL
Knowledge Institute of Technology
Kakapalayam (PO) Salem - 637 504

KNOWLEDGE INSTITUTE OF TECHNOLOGY, SALEM-637504
DEPARTMENT OF MECHANICAL ENGINEERING
HARITA TECHSERV-CERTIFICATE COURSE
SOLID MODELING (LEVEL-1) USING CATIA SOFTWARE
NAMELIST

S.NO	SEC	REG. NO	NAME	YEAR	Remarks
1	A	611217114006	ANBUMANI M S R	II/IV	
2	A	611217114010	ARJUN G S	II/IV	
3	A	611217114017	ASHOK KUMAR T	II/IV	
4	A	611217114018	BALAJI C	II/IV	
5	A	611217114020	BARANIDHARAN M	II/IV	
6	A	611217114023	BHUVANESHWARI S	II/IV	
7	A	611217114028	DHANISH KUMAR N	II/IV	
8	A	611217114038	GOGUL R	II/IV	
9	A	611217114041	GOKUL P	II/IV	
10	B	611217114044	GOKUL R	II/IV	
11	B	611217114045	GOKULKRISHNA R	II/IV	
12	A	611217114047	GOPINATH G	II/IV	
13	B	611217114051	GOWTHAMAN S	II/IV	
14	B	611217114053	GURUPRASAD G	II/IV	
15	B	611217114054	GURUPRASATH R R	II/IV	
16	B	611217114055	HARIHARAN K	II/IV	
17	B	611217114058	HARI PRASANTH R	II/IV	
18	A	611217114062	HARSHAVARDHINI M	II/IV	
19	A	611217114063	ILAKKIYA G	II/IV	
20	A	611217114064	INDERJITH KARTHICK RAJA P	II/IV	
21	B	611217114074	JEFFRI IMMANUEL N	II/IV	
22	B	611217114085	KARTHIKEYAN S	II/IV	
23	B	611217114086	KATHIRAVAN M J	II/IV	
24	B	611217114087	KAVIN KUMAR V	II/IV	
25	B	611217114093	LOKESH KUMAR R	II/IV	
26	B	611217114095	MAHADEVAN S	II/IV	
27	C	611217114118	NIRMAL RAJ S	II/IV	
28	C	611217114123	PARISHITH C M	II/IV	
29	C	611217114129	PRADEEPRAJ A	II/IV	
30	C	611217114133	PRAVEEN KUMAR P	II/IV	
31	C	611217114135	PRITHEEVE GOWTHAM A M S	II/IV	

PRINCIPAL,
Knowledge Institute of Technology
Kakapalayam (PO) Salem - 637 504

32	C	611217114137	RAGUL E	II/IV	
33	C	611217114140	RAJA J	II/IV	
34	C	611217114146	RAKUL A M	II/IV	
35	C	611217114147	RAM E	II/IV	
36	C	611217114153	RANJITH KUMAR S	II/IV	
37	C	611217114154	RANJITHRAJAN S	II/IV	
38	C	611217114156	REVANTH J	II/IV	
39	C	611217114162	SAKTHIVEL S	II/IV	
40	D	611217114184	SUDHARSAN S M	II/IV	
41	D	611217114188	SURESHKRISHNA P	II/IV	
42	D	611217114189	SURESHKUMAR V	II/IV	
43	D	611217114197	THILIPKUMAR S	II/IV	
44	D	611217114204	VENKATESAN K	II/IV	
45	D	611217114208	VIGGNESHWAR V	II/IV	
46	D	611217114209	VIGNESWARAN M	II/IV	
47	D	611217114212	VINOD KUMAR S	II/IV	
48	D	611217114219	YUVARAJ K	II/IV	
49	D	611217114303	ARAVIND B	II/IV	
50	D	611217114308	KOWSHIKAN G	II/IV	
51	D	611217114309	KUMAR V	II/IV	
52	D	611217114313	SYEDFAKHRUDDEEN S	II/IV	

FACULTY INCHARGE

HOD

PRINCIPAL
Knowledge Institute of Technology
Kakapalayam (PO) Salem - 637 504

KNOWLEDGE INSTITUTE OF TECHNOLOGY, SALEM-637504
DEPARTMENT OF MECHANICAL ENGINEERING
HARITA TECHSERV-CERTIFICATE COURSE
SOLID MODELING (LEVEL-1) USING CATIA SOFTWARE
TRAINING ATTENDANCE SHEET (22.01.2019 to 05.02.2019)

S.NO	SEC	REG. NO	NAME	YEAR	22.01.2019	23.01.2019	24.01.2019	25.01.2019	28.01.2019	29.01.2019
1	A	611217114006	ANBUMANI M S R	II/IV	/	/	/	/	/	/
2	A	611217114010	ARJUN G S	II/IV	/	/	/	/	/	/
3	A	611217114017	ASHOK KUMAR T	II/IV	/	/	/	/	/	/
4	A	611217114018	BALAJI C	II/IV	/	/	/	/	/	/
5	A	611217114020	BARANIDHARAN M	II/IV	/	/	/	/	/	/
6	A	611217114023	BHUVANESHWARI S	II/IV	/	/	/	/	/	/
7	A	611217114028	DHANISH KUMAR N	II/IV	/	a	/	/	/	/
8	A	611217114038	GOGUL R	II/IV	/	a	/	/	/	/
9	A	611217114041	GOKUL P	II/IV	/	/	/	/	/	/
10	B	611217114044	GOKUL R	II/IV	/	/	/	/	/	/
11	B	611217114045	GOKULKRISHNA R	II/IV	/	/	/	/	/	/
12	A	611217114047	GOPINATH G	II/IV	/	/	/	/	/	/
13	B	611217114051	GOWTHAMAN S	II/IV	/	/	/	/	/	/
14	B	611217114053	GURUPRASAD G	II/IV	/	/	/	/	/	/
15	B	611217114054	GURUPRASATH R R	II/IV	/	/	/	/	/	/
16	B	611217114055	HARIHARAN K	II/IV	/	/	/	/	/	/
17	B	611217114058	HARI PRASANTH R	II/IV	/	/	/	/	/	/
18	A	611217114062	HARSHAVARDHINI M	II/IV	/	/	/	/	/	/
19	A	611217114063	ILAKKIYA G	II/IV	/	/	/	/	/	/
20	A	611217114064	INDERJITH KARTHICK RAJA P	II/IV	/	/	/	/	/	/
21	B	611217114074	JEFFRI IMMANUEL N	II/IV	/	/	/	/	/	/
22	B	611217114085	KARTHIKEYAN S	II/IV	/	/	/	/	/	/
23	B	611217114086	KATHIRAVAN M J	II/IV	/	/	/	/	/	/
24	B	611217114087	KAVIN KUMAR V	II/IV	/	/	/	/	/	/
25	B	611217114093	LOKESH KUMAR R	II/IV	/	/	/	/	a	/
26	B	611217114095	MAHADEVAN S	II/IV	/	/	/	/	/	/
27	C	611217114118	NIRMAL RAJ S	II/IV	/	/	/	/	/	/
28	C	611217114123	PARISHITH C M	II/IV	/	/	/	/	/	/
29	C	611217114129	PRADEEPRAJ A	II/IV	/	/	/	/	/	/
30	C	611217114133	PRAVEEN KUMAR P	II/IV	/	/	/	/	/	/
31	C	611217114135	PRITHEEVE GOWTHAM A M S	II/IV	/	/	/	/	/	/
32	C	611217114137	RAGUL E	II/IV	/	/	/	/	/	/
33	C	611217114140	RAJA J	II/IV	/	/	/	/	/	/
34	C	611217114146	RAKUL A M	II/IV	/	/	/	/	/	/
35	C	611217114147	RAM E	II/IV	/	/	/	/	/	/
36	C	611217114153	RANJITH KUMAR S	II/IV	/	/	/	/	/	a
37	C	611217114154	RANJITHRAJAN S	II/IV	/	/	/	/	/	/
38	C	611217114156	REVANTH J	II/IV	/	/	/	/	/	/
39	C	611217114162	SAKTHIVEL S	II/IV	/	/	/	/	/	/
40	D	611217114184	SUDHARSAN S M	II/IV	/	/	/	/	/	/
41	D	611217114188	SURESHKRISHNA P	II/IV	/	/	/	/	/	/
42	D	611217114189	SURESHKUMAR V	II/IV	/	/	/	/	/	/
43	D	611217114197	THILIPKUMAR S	II/IV	/	/	/	/	/	/
44	D	611217114204	VENKATESAN K	II/IV	/	/	/	/	/	/
45	D	611217114208	VIGGNESHWAR V	II/IV	/	/	/	/	/	/

PRINCIPAL
Knowledge Institute of Technology
Kakapalayam (PO), Salem - 637 504

46	D	611217114209	VIGNESWARAN M	II/IV	/	/	/	/	/	/
47	D	611217114212	VINOD KUMAR S	II/IV	/	/	/	/	/	/
48	D	611217114219	YUVARAJ K	II/IV	/	/	/	/	/	/
49	D	611217114303	ARAVIND B	II/IV	/	/	/	/	/	/
50	D	611217114308	KOWSHIKAN G	II/IV	/	/	/	/	/	/
51	D	611217114309	KUMAR V	II/IV	/	/	/	/	/	/
52	D	611217114313	SYEDFAKHRUDDEEN S	II/IV	/	/	/	/	/	/
No. of Students Present					52	50	52	52	51	51
No. of Students Absent					–	2	–	–	1	1
Faculty Signature										

FACULTY INCHARGE

HOD MECHANICAL

PRINCIPAL,
Knowledge Institute of Technology
Kakapalayam (PO) Salem - 637 504

KNOWLEDGE INSTITUTE OF TECHNOLOGY, SALEM-637504

DEPARTMENT OF MECHANICAL ENGINEERING

HARITA TECHSERV-CERTIFICATE COURSE

SOLID MODELING (LEVEL-1) USING CATIA SOFTWARE

TRAINING ATTENDANCE SHEET (22.01.2019 to 05.02.2019)

S.NO	SEC	REG. NO	NAME	YEAR	30.01.2019	31.01.2019	01.02.2019	04.02.2019	05.02.2019
1	A	611217114006	ANBUMANI M S R	II/IV					
2	A	611217114010	ARJUN G S	II/IV					
3	A	611217114017	ASHOK KUMAR T	II/IV					
4	A	611217114018	BALAJI C	II/IV					
5	A	611217114020	BARANIDHARAN M	II/IV					
6	A	611217114023	BHUVANESHWARI S	II/IV					
7	A	611217114028	DHANISH KUMAR N	II/IV					
8	A	611217114038	GOGUL R	II/IV					
9	A	611217114041	GOKUL P	II/IV					
10	B	611217114044	GOKUL R	II/IV					
11	B	611217114045	GOKULKRISHNA R	II/IV					
12	A	611217114047	GOPINATH G	II/IV					
13	B	611217114051	GOWTHAMAN S	II/IV					
14	B	611217114053	GURUPRASAD G	II/IV					
15	B	611217114054	GURUPRASATH R R	II/IV					
16	B	611217114055	HARIHARAN K	II/IV					
17	B	611217114058	HARI PRASANTH R	II/IV					
18	A	611217114062	HARSHAVARDHINI M	II/IV					
19	A	611217114063	ILAKKIYA G	II/IV					
20	A	611217114064	INDERJITH KARTHICK RAJA P	II/IV					
21	B	611217114074	JEFFRI IMMANUEL N	II/IV					
22	B	611217114085	KARTHIKEYAN S	II/IV					
23	B	611217114086	KATHIRAVAN M J	II/IV					
24	B	611217114087	KAVIN KUMAR V	II/IV					
25	B	611217114093	LOKESH KUMAR R	II/IV					
26	B	611217114095	MAHADEVAN S	II/IV					
27	C	611217114118	NIRMAL RAJ S	II/IV					
28	C	611217114123	PARISHITH C M	II/IV					
29	C	611217114129	PRADEEPRAJ A	II/IV					
30	C	611217114133	PRAVEEN KUMAR P	II/IV					
31	C	611217114135	PRITHEEVE GOWTHAM A M S	II/IV					
32	C	611217114137	RAGUL E	II/IV					
33	C	611217114140	RAJA J	II/IV					
34	C	611217114146	RAKUL A M	II/IV					
35	C	611217114147	RAM E	II/IV					
36	C	611217114153	RANJITH KUMAR S	II/IV					
37	C	611217114154	RANJITHRAJAN S	II/IV					
38	C	611217114156	REVANTH J	II/IV					
39	C	611217114162	SAKTHIVEL S	II/IV					
40	D	611217114184	SUDHARSAN S M	II/IV					
41	D	611217114188	SURESHKRISHNA P	II/IV					
42	D	611217114189	SURESHKUMAR V	II/IV					
43	D	611217114197	THILIPKUMAR S	II/IV					

PRINCIPAL,
Knowledge Institute of Technology,
Kakapalayam (PO), Salem - 637 504

44	D	611217114204	VENKATESAN K	II/IV	/	/	/	/	/
45	D	611217114208	VIGGNESHWAR V	II/IV	/	/	/	/	/
46	D	611217114209	VIGNESWARAN M	II/IV	/	/	/	/	/
47	D	611217114212	VINOD KUMAR S	II/IV	/	/	/	/	/
48	D	611217114219	YUVARAJ K	II/IV	/	/	/	/	/
49	D	611217114303	ARAVIND B	II/IV	/	/	/	/	/
50	D	611217114308	KOWSHIKAN G	II/IV	/	/	/	/	/
51	D	611217114309	KUMAR V	II/IV	/	/	/	/	/
52	D	611217114313	SYEDFAKHRUDDEEN S	II/IV	/	/	/	/	/
No. of Students Present					52	51	51	52	51
No. of Students Absent					-	1	1	-	1
Faculty Signature									

30/01 31/01 01/02 02/02 05/02

05/02/19

FACULTY INCHARGE

HOD MECHANICAL

PRINCIPAL
Knowledge Institute of Technology
Kakapalayam (PO) Salem - 637 504

KNOWLEDGE INSTITUTE OF TECHNOLOGY, SALEM
Department Of Mechanical Engineering

EVALUATION FORM-CERTIFICATE COURSE

Solid Modeling (Level-1) using CATIA & NXCAD software

Name: G.S. ARJUN	Reg. No: 611217114010	Year/Sem/Sec: II IV

ASSESSMENT TEST

S.NO.	DESCRIPTION	MARKS ALLOTED	MARKS OBTAINED
1	PART-A (SKETCHER)	50	40
2	PART-B (PART DESIGN)	50	40
TOTAL MARKS		100	80

25/02/19

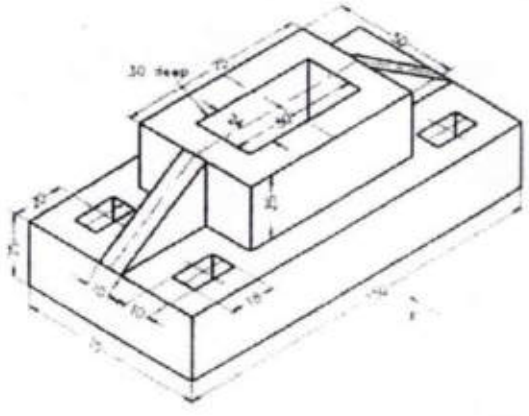

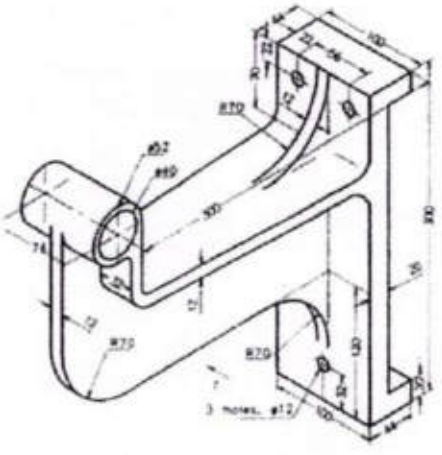

PRINCIPAL
Knowledge Institute of Technology
Kakapalayam (PO) Salem - 637 504

KNOWLEDGE INSTITUTE OF TECHNOLOGY, SALEM
Department Of Mechanical Engineering

EVALUATION FORM-CERTIFICATE COURSE

Solid Modeling (Level-1) using CATIA & NXCAD software

Name: T. Ashok kumar | Reg. No: 611717114017 | Year/Sem/Sec: II IV I

ASSESSMENT TEST

S.NO.	DESCRIPTION	MARKS ALLOTED	MARKS OBTAINED
1	PART-A (SKETCHER)	50	45
2	PART-B (PART DESIGN)	50	45
TOTAL MARKS		100	90

05/02/19

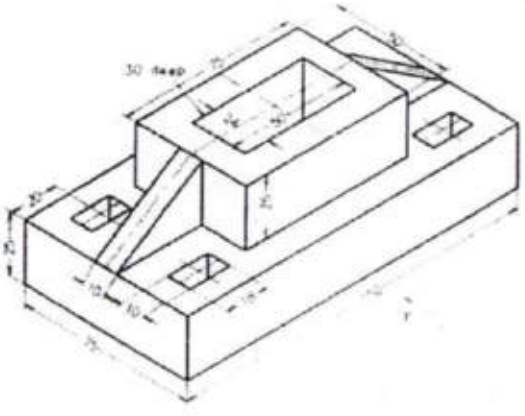

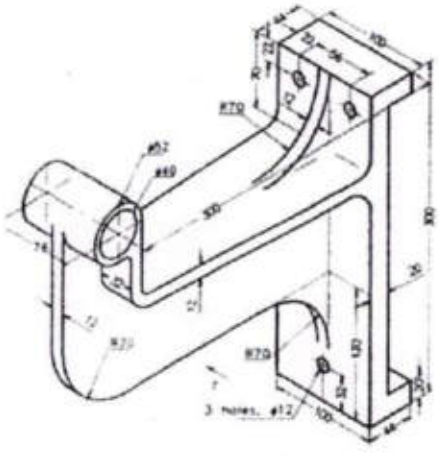

PRINCIPAL,
Knowledge Institute of Technology
Kakapalayam (PO) Salem - 637 504

KNOWLEDGE INSTITUTE OF TECHNOLOGY, SALEM

Department Of Mechanical Engineering

EVALUATION FORM-CERTIFICATE COURSE

Solid Modeling (Level-1) using CATIA & NXCAD software

Name: S. Mahadevan	Reg. No: 611217114095	Year/Sem/Sec: II IV

ASSESSMENT TEST

S.NO.	DESCRIPTION	MARKS ALLOTED	MARKS OBTAINED
1	PART-A (SKETCHER)	50	40
2	PART-B (PART DESIGN)	50	30
TOTAL MARKS		100	70

8/05/19

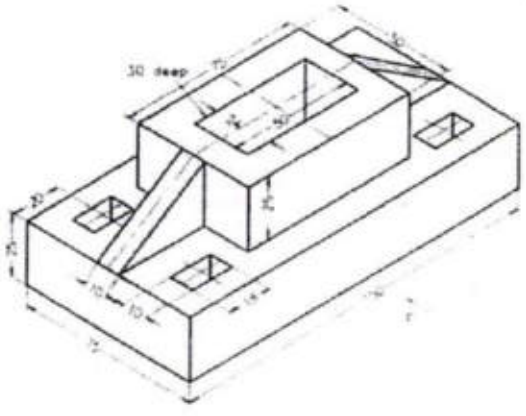

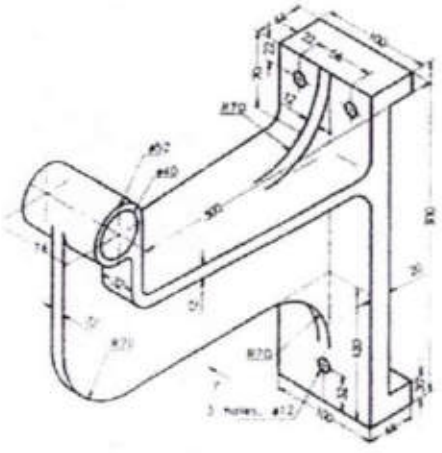

PRINCIPAL
Knowledge Institute of Technology
Kakapalayam (PO) Salem - 637 504

KNOWLEDGE INSTITUTE OF TECHNOLOGY, SALEM

Department Of Mechanical Engineering

EVALUATION FORM-CERTIFICATE COURSE

Solid Modeling (Level-1) using CATIA & NXCAD software

Name: A. PRADEEPRAJ	Reg. No: 611217114129	Year/Sem/Sec: II IV

ASSESSMENT TEST

S.NO.	DESCRIPTION	MARKS ALLOTED	MARKS OBTAINED
1	PART-A (SKETCHER)	50	46
2	PART-B (PART DESIGN)	50	50
TOTAL MARKS		100	96

05/02/19

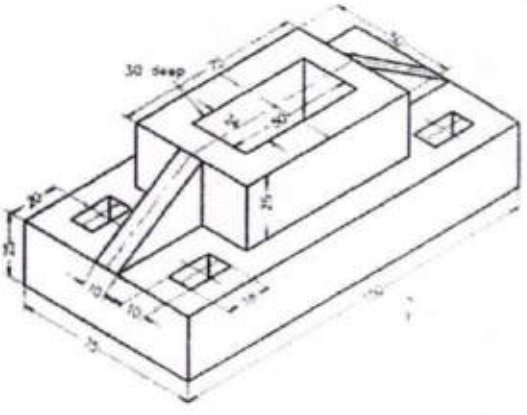

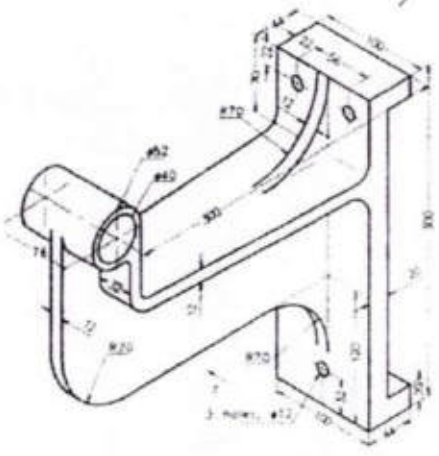

PRINCIPAL
Knowledge Institute of Technology
Kakapalayam (PO), Salem - 637 504

KNOWLEDGE INSTITUTE OF TECHNOLOGY, SALEM

Department Of Mechanical Engineering

EVALUATION FORM-CERTIFICATE COURSE

Solid Modeling (Level-1) using CATIA & NXCAD software

Name: J. Raja	Reg. No: 611217114140	Year/Sem/Sec: II / IV

ASSESSMENT TEST

S.NO.	DESCRIPTION	MARKS ALLOTED	MARKS OBTAINED
1	PART-A (SKETCHER)	50	45
2	PART-B (PART DESIGN)	50	50
TOTAL MARKS		100	95

05/02/19

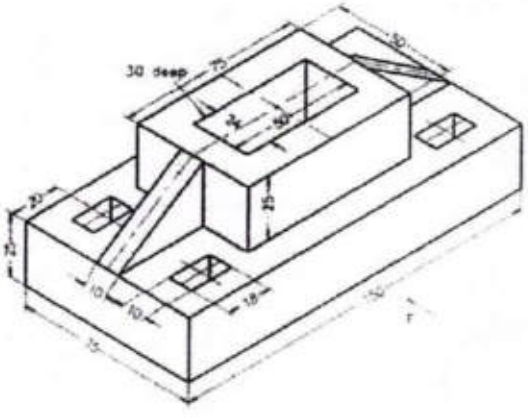

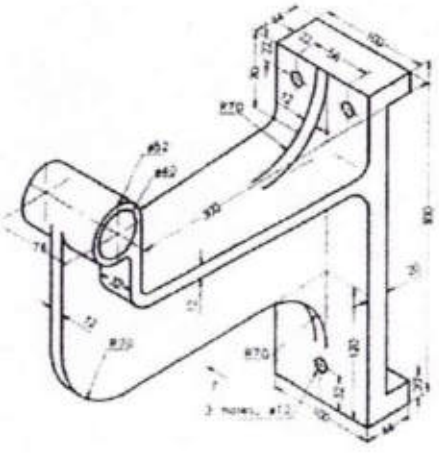

PRINCIPAL,
Knowledge Institute of Technology
Kakapalayam (PO) Salem - 637 504

KNOWLEDGE INSTITUTE OF TECHNOLOGY, SALEM-637504
DEPARTMENT OF MECHANICAL ENGINEERING
HARITA TECHSERV-CERTIFICATE COURSE
SOLID MODELING (LEVEL-1) USING CATIA SOFTWARE
EVALUATION MARKS

05.02.19

S.NO	SEC	REG. NO	NAME	YEAR	MARKS (100)
1	A	611217114006	ANBUMANI M S R	II/IV	90
2	A	611217114010	ARJUN G S	II/IV	80
3	A	611217114017	ASHOK KUMAR T	II/IV	90
4	A	611217114018	BALAJI C	II/IV	65
5	A	611217114020	BARANIDHARAN M	II/IV	50
6	A	611217114023	BHUVANESHWARI S	II/IV	55
7	A	611217114028	DHANISH KUMAR N	II/IV	95
8	A	611217114038	GOGUL R	II/IV	90
9	A	611217114041	GOKUL P	II/IV	65
10	B	611217114044	GOKUL R	II/IV	70
11	B	611217114045	GOKULKRISHNA R	II/IV	55
12	A	611217114047	GOPINATH G	II/IV	65
13	B	611217114051	GOWTHAMAN S	II/IV	70
14	B	611217114053	GURUPRASAD G	II/IV	75
15	B	611217114054	GURUPRASATH R R	II/IV	65
16	B	611217114055	HARIHARAN K	II/IV	85
17	B	611217114058	HARI PRASANTH R	II/IV	80
18	A	611217114062	HARSHAVARDHINI M	II/IV	90
19	A	611217114063	ILAKKIYA G	II/IV	95
20	A	611217114064	INDERJITH KARTHICK RAJA P	II/IV	65
21	B	611217114074	JEFFRI IMMANUEL N	II/IV	70
22	B	611217114085	KARTHIKEYAN S	II/IV	75
23	B	611217114086	KATHIRAVAN M J	II/IV	80
24	B	611217114087	KAVIN KUMAR V	II/IV	85
25	B	611217114093	LOKESH KUMAR R	II/IV	90
26	B	611217114095	MAHADEVAN S	II/IV	70
27	C	611217114118	NIRMAL RAJ S	II/IV	95
28	C	611217114123	PARISHITH C M	II/IV	65
29	C	611217114129	PRADEEPRAJ A	II/IV	70
30	C	611217114133	PRAVEEN KUMAR P	II/IV	60
31	C	611217114135	PRITHEEVE GOWTHAM A M S	II/IV	60

PRINCIPAL,
Knowledge Institute of Technology
Kakapalayam (PO), Salem - 637

05.02.19

32	C	611217114137	RAGUL E	II/IV	80
33	C	611217114140	RAJA J	II/IV	95
34	C	611217114146	RAKUL A M	II/IV	80
35	C	611217114147	RAM E	II/IV	90
36	C	611217114153	RANJITH KUMAR S	II/IV	90
37	C	611217114154	RANJITHRAJAN S	II/IV	95
38	C	611217114156	REVANTH J	II/IV	65
39	C	611217114162	SAKTHIVEL S	II/IV	55
40	D	611217114184	SUDHARSAN S M	II/IV	75
41	D	611217114188	SURESHKRISHNA P	II/IV	60
42	D	611217114189	SURESHKUMAR V	II/IV	65
43	D	611217114197	THILIPKUMAR S	II/IV	70
44	D	611217114204	VENKATESAN K	II/IV	80
45	D	611217114208	VIGGNESHWAR V	II/IV	85
46	D	611217114209	VIGNESWARAN M	II/IV	65
47	D	611217114212	VINOD KUMAR S	II/IV	70
48	D	611217114219	YUVARAJ K	II/IV	95
49	D	611217114303	ARAVIND B	II/IV	90
50	D	611217114308	KOWSHIKAN G	II/IV	65
51	D	611217114309	KUMAR V	II/IV	70
52	D	611217114313	SYEDFAKHRUDDEEN S	II/IV	95

05/02/19
FACULTY INCHARGE

HOD

PRINCIPAL,
Knowledge Institute of Technology
Kakapalayam (PO) Salem - 637 504

KNOWLEDGE INSTITUTE OF TECHNOLOGY
Accredited by NAAC

HARITA TECHSERV LIMITED

Certificate of Completion

This certificate is awarded to

ARJUN.G.S (611217114010)

In recognition of sucessful completion of

"Solid Modeling (Level-1) using CATIA software"

PRINCIPAL
Knowledge Institute of Technology
Kalvalayam (PO) Salem - 637 504

Conducted by "CRCPDT-Harita Techserv Limited" from 22.01.2019 to 05.02.2019
Department of Mechanical Engineering, Knowledge Institute of Technology salem, Tamilnadu, India

Mr.M.Sathyanathan	Dr.K.Visagavel	Dr.PSS.Srinivasan	R.Shankarnarayanan
Coordinator	HOD/Mechanical	Principal	COO/Harita Techserv Limited

KNOWLEDGE INSTITUTE OF TECHNOLOGY
Accredited by NAAC

HARITA TECHSERV LIMITED

Certificate of Completion

This certificate is awarded to

GURUPRASAD.G (611217114053)

In recognition of sucessful completion of

"Solid Modeling (Level-1) using CATIA software"

PRINCIPAL
Knowledge Institute of Technology
Kakapalayam (PO) Salem - 637 504

Conducted by "CRCPDT-Harita Techserv Limited" from 22.01.2019 to 05.02.2019
Department of Mechanical Engineering, Knowledge Institute of Technology salem, Tamilnadu, India

Mr.M.Sathyanathan	Dr.K.Visagavel	Dr.PSS.Srinivasan	R.Shankarnarayanan
Coordinator	HOD/Mechanical	Principal	COO/Harita Techserv Limited

KNOWLEDGE INSTITUTE OF TECHNOLOGY
Accredited by NAAC

HARITA TECHSERV LIMITED

Certificate of Completion

This certificate is awarded to

KARTHIKEYAN.S (611217114085)

In recognition of sucessful completion of

"Solid Modeling (Level-1) using CATIA software"

PRINCIPAL
Knowledge Institute of Technology
Kakapalayam (PO) Salem - 637 504

Conducted by "CRCPDT-Harita Techserv Limited" from 22.01.2019 to 05.02.2019 Department of Mechanical Engineering, Knowledge Institute of Technology salem, Tamilnadu, India

Mr.M.Sathyanathan	Dr.K.Visagavel	Dr.PSS.Srinivasan	R.Shankarnarayanan
Coordinator	HOD/Mechanical	Principal	COO/Harita Techserv Limited

KNOWLEDGE INSTITUTE OF TECHNOLOGY
Accredited by NAAC

HARITA TECHSERV LIMITED

Certificate of Completion

This certificate is awarded to

NIRMALRAJ.S (611217114118)

In recognition of sucessful completion of

"Solid Modeling (Level-1) using CATIA software"

PRINCIPAL
Knowledge Institute of Technology
Kakapalayam (PO), Salem - 637 504

Conducted by "CRCPDT-Harita Techserv Limited" from 22.01.2019 to 05.02.2019 Department of Mechanical Engineering, Knowledge Institute of Technology salem, Tamilnadu, India

Mr.M.Sathyanathan	Dr.K.Visagavel	Dr.PSS.Srinivasan	R.Shankarnarayanan
Coordinator	HOD/Mechanical	Principal	COO/Harita Techserv Limited

KNOWLEDGE INSTITUTE OF TECHNOLOGY
Accredited by NAAC

HARITA TECHSERV LIMITED

Certificate of Completion

This certificate is awarded to

RAM.E (611217114147)

In recognition of sucessful completion of

"Solid Modeling (Level-1) using CATIA software"

PRINCIPAL
Knowledge Institute of Technology
Kakapalayam (PO) Salem - 637 504

Conducted by "CRCPDT-Harita Techserv Limited" from 22.01.2019 to 05.02.2019
Department of Mechanical Engineering, Knowledge Institute of Technology salem, Tamilnadu, India

Mr.M.Sathyanathan	Dr.K.Visagavel	Dr.PSS.Srinivasan	R.Shankarnarayanan
Coordinator	HOD/Mechanical	Principal	COO/Harita Techserv Limited

KNOWLEDGE INSTITUTE OF TECHNOLOGY, SALEM
Department Of Mechanical Engineering

FEEDBACK FORM-CERTIFICATE COURSE

Solid Modeling (Level-1) using NXCAD/CATIA software

Name: S. SAKTHIVEL

Year/Sem/Sec: II IV

S.No.	List of Content	Strongly Agree	Agree	Neutral	Disagree	Strongly Disagree
1	About Introduction to CATIA V5	✓				
2	Sketcher Workbench		✓			
3	Part Modeling		✓			
4	Assembly Design		✓			
5	Course content and Hands on Experience of CATIA V5		✓			
6	Trainer Explanation level about this course		✓			
7	Have you learned Shortcuts of the Tool and worked out Industry Drawings		✓			
8	Overall Experience about this course	✓				

Suggestion for Improvement

S. Sakthivel.
Signature of the Candidate

PRINCIPAL
Knowledge Institute of Technology
Kakapalayam (PO) Salem - 637 504

KNOWLEDGE INSTITUTE OF TECHNOLOGY, SALEM
Department Of Mechanical Engineering

FEEDBACK FORM-CERTIFICATE COURSE

Solid Modeling (Level-1) using NXCAD/CATIA software

Name: P. Sureshkrishna Year/Sem/Sec: II IV

S.No.	List of Content	Strongly Agree	Agree	Neutral	Disagree	Strongly Disagree
1	About Introduction to CATIA V5	✓				
2	Sketcher Workbench	✓				
3	Part Modeling	✓				
4	Assembly Design		✓			
5	Course content and Hands on Experience of CATIA V5	✓				
6	Trainer Explanation level about this course	✓				
7	Have you learned Shortcuts of the Tool and worked out Industry Drawings	✓				
8	Overall Experience about this course	✓				

Suggestion for Improvement

PRINCIPAL,
Knowledge Institute of Technology,
Kakapalayam (PO) Salem - 637 504

P. Sureshkrishna
Signature of the Candidate

KNOWLEDGE INSTITUTE OF TECHNOLOGY, SALEM
Department Of Mechanical Engineering

FEEDBACK FORM-CERTIFICATE COURSE

Solid Modeling (Level-1) using NXCAD/CATIA software

Name: V. Suresh Kumar. Year/Sem/Sec: II IV

S.No.	List of Content	Strongly Agree	Agree	Neutral	Disagree	Strongly Disagree
1	About Introduction to CATIA V5		✓			
2	Sketcher Workbench		✓			
3	Part Modeling		✓			
4	Assembly Design	✓				
5	Course content and Hands on Experience of CATIA V5		✓			
6	Trainer Explanation level about this course		✓			
7	Have you learned Shortcuts of the Tool and worked out Industry Drawings	✓				
8	Overall Experience about this course	✓				

Suggestion for Improvement

V. Suresh Kumar
Signature of the Candidate

PK NCIPAL
Knowledge Institute of Technology
Kakapalayam (PO) Salem - 637 504

KNOWLEDGE INSTITUTE OF TECHNOLOGY, SALEM
Department Of Mechanical Engineering

FEEDBACK FORM-CERTIFICATE COURSE

Solid Modeling (Level-1) using NXCAD/CATIA software

Name: K.YUVARAJ Year/Sem/Sec: III IV

S.No.	List of Content	Strongly Agree	Agree	Neutral	Disagree	Strongly Disagree
1	About Introduction to CATIA V5	✓				
2	Sketcher Workbench	✓				
3	Part Modeling	✓				
4	Assembly Design	✓				
5	Course content and Hands on Experience of CATIA V5	✓				
6	Trainer Explanation level about this course	✓				
7	Have you learned Shortcuts of the Tool and worked out Industry Drawings	✓				
8	Overall Experience about this course	✓				

Suggestion for Improvement

K. Yuvaraj

Signature of the Candidate

PRINCIPAL,
Knowledge Institute of Technology,
Kakapalayam (PO) Salem - 637 504

KNOWLEDGE INSTITUTE OF TECHNOLOGY, SALEM
Department Of Mechanical Engineering

FEEDBACK FORM-CERTIFICATE COURSE

Solid Modeling (Level-1) using NXCAD/CATIA software

Name: B. Aravind Year/Sem/Sec: II / IV

S.No.	List of Content	Strongly Agree	Agree	Neutral	Disagree	Strongly Disagree
1	About Introduction to CATIA V5		✓			
2	Sketcher Workbench		✓			
3	Part Modeling			✓		
4	Assembly Design		✓			
5	Course content and Hands on Experience of CATIA V5			✓		
6	Trainer Explanation level about this course		✓			
7	Have you learned Shortcuts of the Tool and worked out Industry Drawings		✓			
8	Overall Experience about this course		✓			

Suggestion for Improvement

Signature of the Candidate

PRINCIPAL
Knowledge Institute of Technology
Kakapalayam (PO) Salem - 637 504

KNOWLEDGE INSTITUTE OF TECHNOLOGY, SALEM-637504

DEPARTMENT OF MECHANICAL ENGINEERING

REPORT OF THE EVENT (Module:4)

Date	:	02.01.2019 to 28.01.2019	**Resource person**	:	**Mr.J.Ramesh & Mr.S.Surendar** Assistant Professor, Department of Mechanical Engineering, Knowledge Institute of Technology
Time	:	9.00am to 5.00pm	**Title**	:	**Cost Estimation for a Specific Project**
Venue	:	AEROW DUCT, Bengaluru. Mallya chiller plant, UB City,Bengaluru.	**No. of Participants**	:	43

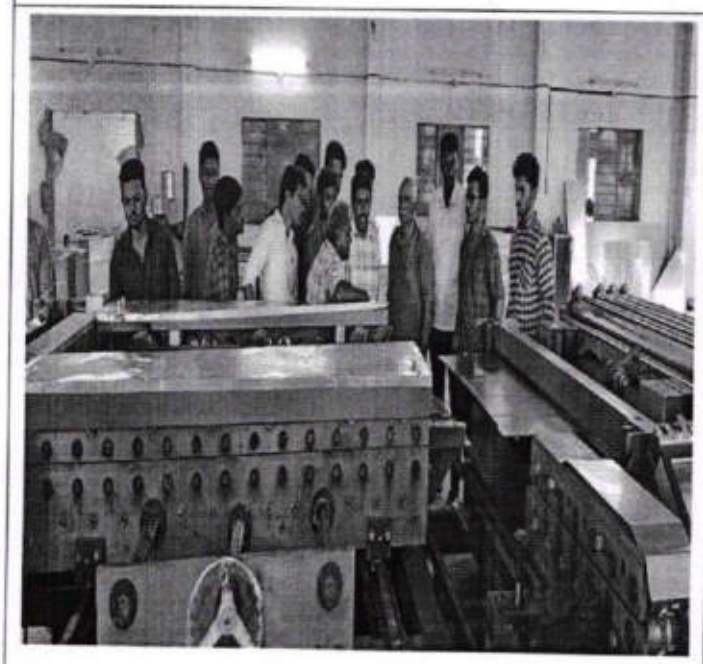

AEROW DUCT, Bengaluru.

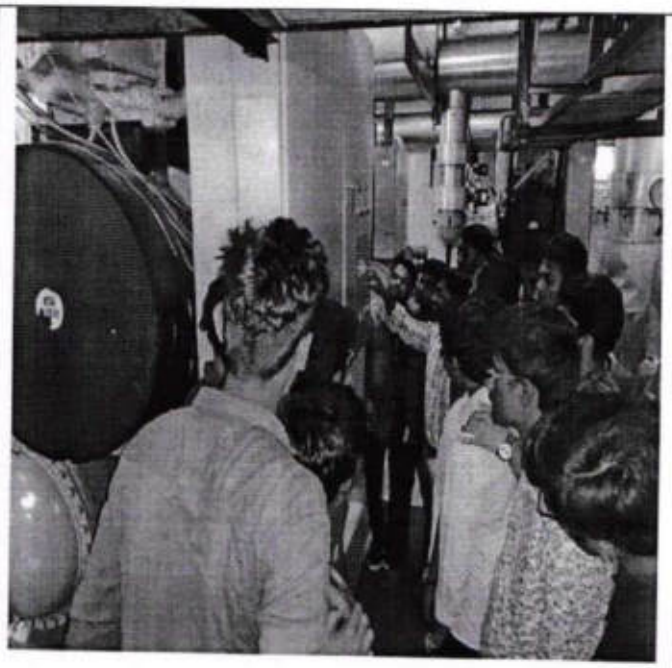

Chiller Plant,
UB City, Bengaluru.

Encl: Circular / Brochure / Attendance Sheet

Principal,
Knowledge Institute of Technology,
Kakapalayam (Po), Salem-637 504.

KNOWLEDGE INSTITUTE OF TECHNOLOGY, SALEM - 637 504			
CIRCULAR			
Circular No.	KIOT/MECH/IAPMO/2018-19/04	**Date**	24.12.2018
To	All Faculty & Final year students of Mechanical Engineering		
Subject	**Cost Estimation for a Specific Project System** - IAPMO - Certification Course - Reg.		
Circular issued by	IIK (IAPMO-India-KIOT) center		

We have planned to conduct, HVAC Training on **Cost Estimation for a Specific Project System** from 02.01.2019 for Final year Mechanical Engineering students through IIK (IAPMO-India-KIOT) center in this Academic Year (2018-2019).

Venue: A302.

Time: 05.00pm to 07.00pm

Encl: Name list of shortlisted students.

SENDER		PRINCIPAL

MECH	VP Office	CIVIL	EEE	ECE	CSE	S&H	PD	LIB	EMS	AO	Transport I/C	Hostel NB	Director / Training	Director / Placement	Residential Warden		College NB	Office / File	Class Circulation	Security Office	KBS	Reception
															LH	GH						
*	*	*	*	*	*	*	*						*	*				*	*			

Checked by Principal office I/C		Verified by the sender	

File :

1) Principal Office :
2) Concerned issuing department :

Principal,
Knowledge Institute of Technology
Kakapalayam (Po), Salem-637 504

From

S.Surendar,
Assistant Professor,
Department of Mechanical Engineering,
Knowledge Institute of Technology,
Salem.

To

The Principal,
Knowledge Institute of Technology,
Salem. .

Through: Head of the Department, Department of Mechanical Engineering

Respected Sir,

Sub: Cost Estimation for a Specific Project System –regarding

We have planned to conduct, HVAC Training on **Cost Estimation for a Specific Project System** from 02.01.2019 for final year mechanical engineering students through IIK (IAPMO-India-KIOT) center in this Academic Year (2018-2019).In this regard, I request your permission to execute the certification course for final year Mechanical Engineering students.

Encl: Name list of shortlisted students.

Thanking You

Place: Salem

Date:24.12.2018

Yours Faithfully

24/12/2018

S.Surendar AP/Mech

(HOD/MECH)

Principal,
Knowledge Institute of Technology,
Kanalavam (Po), Salem-637 504

KNOWLEDGE INSTITUTE OF TECHNOLOGY, SALEM-637504

DEPARTMENT OF MECHANICAL ENGINEERING

CENTER FOR HEATING VENTILATION AND AIR CONDITIONING

BATCH- (2015-2019) AY: 2018-19

NAME LIST

Year/Sem: IV / VIII

Date:24.12.2018

S.No.	Register Number	Student Name	Remarks
1.	611215114001	ABISHEK HUSSAIN J	
2.	611215114002	ABISHIEK B	
3.	611215114003	ADITHYA R	
4.	611215114004	ADITYA R	
5.	611215114011	ARULBALAJI S	
6.	611215114013	ARUNACHALAM K	
7.	611215114014	ARUNKUMAR P	
8.	611215114016	ASIK RAM K P	
9.	611215114027	CHANDRAPRAKASH K	
10.	611215114039	DINESH.P	
11.	611215114046	GOKUL S	
12.	611215114048	GOKULRAJ S	
13.	611215114050	GOPIKANNAN R	
14.	611215114051	GOVINDARAJ S	
15.	611215114079	KARTHIKEYAN M	
16.	611215114083	KAVIN T	
17.	611215114089	KESAVANATHAN B	
18.	611215114091	KIRUBA S	
19.	611215114092	KISHORE K	
20.	611215114093	LINGESH K	
21.	611215114094	LOGANADHAN R	
22.	611215114095	LOGESH J	
23.	611215114096	LOGESH M	
24.	611215114097	LOGESHWARAN S	
25.	611215114098	MADHANKUMAR C	
26.	611215114099	MADHAVANATH J M	
27.	611215114103	MANIKANDAN S	
28.	611215114104	MANISHKUMAR K	
29.	611215114105	MANO K	
30.	611215114108	MANOJ KUMAR S	
31.	611215114116	MOHAN A K	
32.	611215114119	MOHANKUMAR R	
33.	611215114121	MOHAN KUMAR A P	
34.	611215114123	MUGUNTHA ADITYA R	
35.	611215114124	MURALI R	
36.	611215114128	MUTHUKUMAR S	
37.	611215114136	NIRMAL S	
38.	611215114146	POTHIGAI SELVAN M	
39.	611215114192	SATHISH KUMAR C	
40.	611215114206	SRIRAM N	
41.	611215114218	TAMILSELVAN S	
42.	611215114244	WINSLETVASANTHRAAJ T S	
43.	611215114341	VENKATESHWARAN M	

FACULTY I/C

HOD/MECH

PRINCIPAL

Principal,
Knowledge Institute of Technology
Kakapalayam (Po), Salem-637 504

KNOWLEDGE INSTITUTE OF TECHNOLOGY Department of Mechanical Engineering A.Y:2018-19 Course Plan (2019 Batch) Date:30.07.2018				
Name of the COE		IAPMO-India – KIOT, Centre of Excellence		
Name of the Course		HVAC Design and Project Installation Engineer	**Semester**	07 & 08
Name of the Module	**Topics to be covered**	**Faculty Name**	**Number of Hours**	**Faculty Signature**
Ducting Design for all air HVAC system	Air terminal selection, Cold storage selection, Selection of Materials of Ducts, Primary and secondary pump selections Duct material selection, Selection of cooling tower Selection of Chillers, AHU and FCU classification and selection.	Mr.J.Ramesh, Mr.R.Isaac & Mr.S.Rajesh.	30	
Cost Estimation for a Specific Project	Calculate Plant Tonnage, Develop Vendor Short List, Obtain Chiller Bid, Adjust for Other First-Cost Impacts, Estimate Utility Costs, Estimate Maintenance Costs, Calculate Life-cycle Costs, Final Chiller Selection	Mr.R.Isaac Mr.J.Ramesh & Mr.S.Surendar.	30	
		Total No.of Hours	**60**	

Detailed Execution Plan

Name of the Course Module: 3.Ducting Design for all air HVAC system

Duration: 30 hours

Module No.	Name of the Module	Teaching Hours	Practical Hours	Self-Study Hours	Course Plan (Day wise)
3.1	Orientation of Building	2	-	-	Day 1
3.2	Orientation of Building	1	-	1	Day 2
3.3	To Read Latitude & Location of building	2	-	-	Day 3
3.4	Difference for wall, glass, Roof and Partition	1	-	1	Day 4
3.5	Cooling and Heat Load Calculation	2	-	-	Day 5
3.6	Cooling and Heat Load Calculation	2	-	-	Day 6
3.7	Cooling and Heat Load Calculation	1	-	1	Day 7
3.8	Calculation of sensible Heat Factor	2	-	-	Day 8
3.9	Calculation of sensible Heat Factor	2	-	-	Day 9
3.10	ADP and Dehumidified CFM	2	-	-	Day 10

Principal,
Knowledge Institute of Technology
Kakapalayam (Po), Salem-637 504

3.11	ADP and Dehumidified CFM	1	-	1	Day 11
3.12	Chilled water system & Equipment Selection	2	-	-	Day 12
3.13	Chilled water system & Equipment Selection	1	-	1	Day 13
3.14	Study & Preparation of Floor Drawings Roof Drawings	2	-	-	Day 14
3.15	Study & Preparation of Floor Drawings Roof Drawings	1	-	1	Day 15

Detailed Execution Plan

Name of the Course Module: 4. Cost Estimation for a Specific Project

Duration: 30 hours

Module No.	Name of the Module	Teaching Hours	Practical Hours	Self-Study Hours	Course Plan (Day wise)
4.1	Calculate Plant Tonnage	2	-	-	Day 1
4.2	Calculate Plant Tonnage	2	-	-	Day 2
4.3	Calculate Plant Tonnage	1	-	1	Day 3
4.4	Develop Vendor Short List	2	-	-	Day 4
4.5	Develop Vendor Short List	2	-	-	Day 5
4.6	Obtain Chiller Bids	2	-	-	Day 6
4.7	Obtain Chiller Bids	1	-	1	Day 7
4.8	Adjust for Other First-Cost Impacts	2	-	-	Day 8
4.9	Adjust for Other First-Cost Impacts	1	-	1	Day 9
4.10	Estimate Utility Costs	2	-	-	Day 10
4.11	Estimate Utility Costs	2	-	-	Day 11
4.12	Estimate Maintenance Costs	2	-	-	Day 12
4.13	Estimate Maintenance Costs	1	-	1	Day 13
4.14	Final Chiller Selection	2	-	-	Day 14
4.15	Final Chiller Selection	1	-	1	Day 15

FACULTY I/C HOD/MECH PRINCIPAL

Principal,
Knowledge Institute of Technology
Kakapalayam (Po), Salem-637 504

KNOWL[illegible]GE INSTITUTE OF TECHNOLOGY, SALE[illegible] 637504

DEPARTMENT OF MECHANICAL ENGINEERING

CENTER FOR HEATING VENTILATION AND AIR CONDITIONING

BATCH-2015-19 / **Cost Estimation for a Specific Project System** / Academic Year/ SEM: 2018-19 / Even Date: 29.01.2019

S.No	Reg.No	Name of the student	Year / Sem	02. 01. 2019	03. 01. 2019	04. 01. 2019	07. 01. 2019	08.01.2019	09. 01. 2019	10. 01. 2019	17. 01. 2019	18. 01. 2019	22. 01. 2019	23. 01. 2019	24. 01. 2019	25. 01. 2019	28. 01. 2019	29. 01. 2019
1.	611215114001	ABISHEK HUSSAIN J	IV / VIII	/	/	/	/	/	/	/	/	/	/	/	/	/	/	/
2.	611215114002	ABISHIEK B	IV / VIII	/	/	/	/	/	/	/	/	/	/	/	/	/	/	/
3.	611215114003	ADITHYA R	IV / VIII	/	/	/	/	/	/	/	/	/	/	/	/	/	/	/
4.	611215114004	ADITYA R	IV / VIII	/	/	/	/	/	/	/	a	/	/	/	/	/	/	/
5.	611215114011	ARULBALAJI S	IV / VIII	/	/	/	/	/	/	/	/	/	/	/	/	/	/	/
6.	611215114013	ARUNACHALAM K	IV / VIII	/	/	/	/	/	/	/	/	/	/	/	/	/	/	/
7.	611215114014	ARUNKUMAR P	IV / VIII	/	/	/	/	/	/	/	/	/	/	/	/	/	/	/
8.	611215114016	ASIK RAM K P	IV / VIII	/	/	a	/	/	/	/	/	/	/	/	/	/	/	/
9.	611215114027	CHANDRAPRAKASH K	IV / VIII	/	/	/	/	/	/	/	/	/	/	/	/	/	/	/
10.	611215114039	DINESH.P	IV / VIII	/	/	/	/	/	/	/	/	/	/	/	/	/	/	/
11.	611215114046	GOKUL S	IV / VIII	/	/	/	/	/	/	/	/	/	/	/	/	/	a	/
12.	611215114048	GOKULRAJ S	IV / VIII	/	/	/	/	/	/	/	/	/	/	/	/	/	/	/
13.	611215114050	GOPIKANNAN R	IV / VIII	/	/	/	/	/	/	/	/	/	/	/	/	/	/	/
14.	611215114051	GOVINDARAJ S	IV / VIII	/	/	/	/	/	/	/	/	/	/	/	/	/	/	/
15.	611215114079	KARTHIKEYAN M	IV / VIII	/	/	/	/	/	/	/	/	/	/	/	/	/	/	/
16.	611215114083	KAVIN T	IV / VIII	/	/	/	/	/	/	/	/	/	/	/	a	/	/	/
17.	611215114089	KESAVANATHAN B	IV / VIII	/	/	/	/	/	/	/	/	/	/	/	/	/	/	/
18.	611215114091	KIRUBA S	IV / VIII	/	/	/	/	/	/	/	/	/	/	/	/	/	/	/
19.	611215114092	KISHORE K	IV / VIII	/	/	/	/	/	/	/	/	/	/	/	/	/	/	/
20.	611215114093	LINGESH K	IV / VIII	/	/	/	/	/	/	/	/	/	/	/	/	/	/	/
21.	611215114094	LOGANADHAN R	IV / VIII	/	/	/	/	/	/	/	/	/	/	/	/	/	/	/

Principal,
Knowledge Institute of Technology
Kakapalayam (Po), Salem-637 504.

22.	611215114095	LOGESH J	IV / VIII																
23.	611215114096	LOGESH M	IV / VIII																
24.	611215114097	LOGESHWARAN S	IV / VIII																
25.	611215114098	MADHANKUMAR C	IV / VIII																
26.	611215114099	MADHAVANATH J M	IV / VIII																
27.	611215114103	MANIKANDAN S	IV / VIII																
28.	611215114104	MANISHKUMAR K	IV / VIII																
29.	611215114105	MANO K	IV / VIII																
30.	611215114108	MANOJ KUMAR S	IV / VIII																
31.	611215114116	MOHAN A K	IV / VIII																
32.	611215114119	MOHANKUMAR R	IV / VIII																
33.	611215114121	MOHAN KUMAR A P	IV / VIII																
34.	611215114123	MUGUNTHA ADITYA R	IV / VIII																
35.	611215114124	MURALI R	IV / VIII																
36.	611215114128	MUTHUKUMAR S	IV / VIII																
37.	611215114136	NIRMAL S	IV / VIII																
38.	611215114146	POTHIGAI SELVAN M	IV / VIII																
39.	611215114192	SATHISH KUMAR C	IV / VIII																
40.	611215114206	SRIRAM N	IV / VIII																
41.	611215114218	TAMILSELVAN S	IV / VIII																
42.	611215114244	WINSLETVASANTHRAAJ T S	IV / VIII																
43.	611215114341	VENKATESHWARAN M	IV / VIII																
			No. of Students Present	43	43	41	43	43	43	42	42	43	43	43	41	43	40	43
			No. of Students Absent	NIL	NIL	02	NIL	NIL	NIL	01	01	NIL	NIL	NIL	02	NIL	03	NIL
			Faculty Signature																

FACULTY I/C

HoD/MECH

PRINCIPAL

Principal,
Knowledge Institute of Technology
Kakapalayam (Po), Salem-637 504

KNOWLEDGE INSTITUTE OF TECHNOLOGY

DEPARTMENT OF MECHANICAL ENGINEERING

IAPMO-India – KIOT, Centre of Excellence

Subject Name	Cost Estimation for a Specific Project				
Name of the Student	Gopikannan . R				
Register No	611215114050				
Date	31/01/2019	Duration	60 Minutes	Max.Marks	50
Faculty Name	Marks Awarded				
S.SARAVANAN	43	FOUR THREE			
Faculty Signature					

ANSWER ALL THE QUESTIONS-(50X01=50)

1. To make out an estimate for a work the following data are necessary-Drawing, Specification and _____
   a) materials b) rates c) labours d) transportation
2. _____ is required for preliminary studies of various aspects of a work or project.
   a) Supplementary Estimate b) Plinth Area Estimate c) Revised Estimate d) Abstract Estimate
3. Approximate cost of a hostel building for 100 students's @Rs.10000/- per student works out as Rs. 10 lakhs.
   a) True b) False
4. Per kilometre basis depending on the nature of road, for 10 km of a state highway approx. cost @ Rs. 50000/- per 1 km works out as Rs. 5 lakh.
   a) True b) False
5. The approx. cost of 10 km length of irrigation channel of 3 cu m per sec. capacity @ Rs.70000/- per km works out as Rs.7 lakh. a) True b) False
6. Approx. cost of a bridge of 3 spans of 50 m each span @Rs.30000/- per running m of span comes to 3*50*30000= Rs. 45 lakhs. a) True b) False
7. Approximate cost of sewerage project for a population of one lakh@ Rs. 10/- head works out as Rs. 10 lakh. a) True b) False
8. Cube rate estimate is less accurate as compared to the plinth area estimate as the height of the building is also compared. a) False b) True
9. Cube rate estimate is less accurate as compared to the plinth area estimate as the height of the building is also compared. a) False b) True
10. _____ is prepared on the basis of plinth area of building, the rate being deducted from the cost of similar building having similar specification, heights and construction, in the locality.
    a) Cube Rate Estimate b) Supplementary Estimate
    c) Maintenance Estimate d) Plinth Area Estimate
11. _____is the amount provided in the estimate and bill of quantities for some specialised work to be done by a specialised firm; whose details are not known at the time of preparing estimate.
    a) Prime cost b) Provisional sum c) Capital cost d) Building cost index
12. In this method approx. total length of walls is found in running metre and this total length multiplied by the rate per running metre of wall gives a fairly accurate cost.
    a) Annual repair b)Item rate estimate c) Approximate quantity method estimate
    d) Cubical content estimate
13. _____ Estimate is a detailed estimate and is prepared to maintain the structure or work in proper order and safe condition.
    a) Supplementary and revised estimate b)Maintenance estimate c) Item rate estimate
    d) Revised estimate
14. A large work or project may consists of several building or small works and each of these work is known as_____
    a) sub-work b) sub-project c) sub-head d) sub-construction
15. The term _____ is used to denote a procedure of costing or valuing an item of work on the basis of actual labourers and materials required.
    a) prime cost b) hour-work c) day-work d) sub-work
16. In a reversed Brayton cycle, the heat is absorbed by the air during

Principal,
Knowledge Institute of Technology,
Kakapalayam (Po), Salem-637 504.

(A) Isentropic compression process (B) Constant pressure cooling process
(C) Isentropic expansion process (D) Constant pressure expansion process

17. Wet bulb temperature is the temperature of air recorded by a thermometer, when
(A) It is not affected by the moisture present in the air
(B) Its bulb is surrounded by a wet cloth exposed to the air
(C) The moisture present in it begins to condense
(D) None of the above

18. The difference between dry bulb temperature and dew point temperature, is called
(A) Dry bulb depression (B) Wet bulb depression
(C) Dew point depression (D) Degree of saturation

19. In mechanical refrigeration system, the refrigerant has the maximum temperature
(A) In evaporator (B) Before expansion valve
(C) Between compressor and condenser (D) Between condenser and evaporator

20. The central air conditioning system has _____ overall efficiency as compared to individual systems.
(A) Same (B) Lower (C) Higher (D) None of these

21. Moisture should be removed from refrigerants to avoid
(A) Freezing at the expansion valve (B) Restriction to refrigerant flow
(C) Corrosion of steel plates (D) All of these

22. The specific humidity during humidification process
(A) Remains constant (B) Increases (C) Decreases (D) None of these

23. During a refrigeration cycle, heat is rejected by the refrigerant in a
(A) Compressor (B) Condenser (C) Evaporator (D) Expansion valve

24. In a vapour compression system, the condition of refrigerant is dry saturated vapour
(A) Before entering the compressor (B) After leaving the compressor
(C) Before entering the condenser (D) After leaving the condenser

25. During sensible cooling of air, specific humidity
(A) Remains constant (B) Increases (C) Decreases (D) None of these

26. In a psychrometric chart, specific humidity (moisture content) lines are
(A) Vertical and uniformly spaced (B) Horizontal and uniformly spaced
(C) Horizontal and non-uniformly spaced (D) Curved lines

27. The horizontal and non-uniformly spaced lines on a psychrometric chart indicates
(A) Dry bulb temperature (B) Wet bulb temperature
(C) Dew point temperature (D) Specific humidity

28. In a vapour compression refrigeration system, a throttle valve is used in place of an expander because
(A) It considerably reduces mass of the system (B) It improves the C.O.P., as the condenser is small
(C) The positive work in isentropic expansion of liquid is very small (D) It leads to significant cost Reduction

29. Unit of thermal conductivity in M.K.S. units is
(A) K cal/kg m² °C (B) K cal m/hr m² °C (C) K cal/hr m² °C (D) K calm/hr °C

30. Thermal diffusivity is a
(A) Function of temperature (B) Physical property of a substance
(C) Dimensionless parameter (D) All of these

31. Unit of thermal conductivity in S.I. units is
(A) J/m² sec (B) J/m °K sec (C) W/m °K (D) Option (B) and (C) above.

32. Which of the following statement is wrong?
(A) The heat transfer in liquid and gases takes place according to convection
(B) The amount of heat flow through a body is dependent upon the material of the body
(C) The thermal conductivity of solid metals increases with rise in temperature
(D) Logarithmic mean temperature difference is not equal to the arithmetic mean temperature difference

33. Thermal conductivity of solid metals with rise in temperature normally
(A) Increases (B) Decreases (C) Remain constant
(D) May increase or decrease depending on temperature

34. In free convection heat transfer transition from laminar to turbulent flow is governed by the critical value of the
(A) Reynold's number (B) Grashoff's number (C) Reynold's number, Grashoff's number

Principal,
Knowledge Institute of Technology,
Kanjapalayam (Po), Salem-637 504

(D) Prandtl number, Grashoff's number

35. Thermal conductivity of non-metallic amorphous solids with decrease in temperature
    (A) Increases (B) Decreases (C) Remain constant
    (D) May increase or decrease depending on temperature
36. According to Dalton's law of partial pressures, (where pb = Barometric pressure, pa = Partial pressure of dry air, and pv = Partial pressure of water vapour)
    (A) Pb = pa – pv (B) Pb = pa + pv (C) Pb = pa × pv (D) Pb = pa/pv
37. Heat transfer takes place as per
    (A) Zeroth law of thermodynamics (B) First law of thermodynamics
    (C) Second law of thermodynamics (D) Kirchaffs Law
38. The heat transfer by conduction through a thick sphere is given by
    (A) Q = 2πkr1 r2 (T1 - T2)/ (r2 - r1) (B) Q = 4πkr1 r2 (T1 - T2)/ (r2 - r1)
    (C) Q = 6πkr1 r2 (T1 - T2)/ (r2 - r1) (D) Q = 8πkr1 r2 (T1 - T2)/ (r2 - r1)
39. When heat is transferred from one particle of hot body to another by actual motion of the heated particles, it is referred to as heat transfer by
    (A) Conduction (B) Convection (C) Radiation (D) Conduction and convection
40. Fourier's law of heat conduction is (where Q = Amount of heat flow through the body in unit time, A = Surface area of heat flow, taken at right angles to the direction of heat flow, dT = Temperature difference on the two faces of the body, dx = Thickness of the body, through which the heat flows, taken along the direction of heat flow, and k = Thermal conductivity of the body)
    (A) k. A. (dT/dx) (B) k. A. (dx/dT) (C) k. (dT/dx) (D) k. (dx/dT)
41. When the temperatures of a structure both inside and outside are equal, there is _____.
    a. no heat transfer b. latent heat transfer to the outside
    c. thermal heat transfer of sensible heat d. a lower rate of relative humidity
42. Polyolester (POE) oils stored in plastic containers will _____.
    a. separate b. become more alkaline
    c. become acidic d. absorb moisture through the plastic
43. R-407C has _____-.
    a. a foul odor b. to be charged in the vapor phase
    c. the ability to fractionate d. no temperature glide
44. What is a carbon footprint?
    a. The carbon deposits from burning gasoline.
    b. The amount of carbon dioxide that is produced to support your lifestyle.
    c. The amount of carbon in the atmosphere produced by the world's lifestyle.
    d. The amount of carbon in the stratosphere.
45. What is energy management?
    a. A rule that the total amount of energy stays constant in an isolated system over time.
    b. Recovering energy lost while using mechanical equipment.
    c. Reading the electric and fuel gas meters every month.
    d. The monitoring and controlling of energy consuming devices.
46. The function of duct in air conditioning unit is:
    (a) air cooling (b) air cleaning (c) air drying (d) air distribution
47. Process of changing solid into vapour state without passing through liquid state is:
    (a) super heating (b) sublimation (c) subcooling (d) triple point
48. Amount of heat required to raise the temperature of one unit of substance through 1 degree is called:
    (a) C.H.U. (b) B.T.U. (c) Calorie (d) Specific heat
49. The COP of a domestic air conditioning in comparison to domestic refrigerator will be:
    (a) same (b) less (c) more (d) depends upon weather conditions
50. Solenoid valve is operated:
    (a) electrically (b) by hand (c) by gas pressure (d) by oil pressure

FACULTY I/C **HOD/MECH**

Principal,
Knowledge Institute of Technology
Kakapalayam (Po), Salem-637 504

KNOWLEDGE INSTITUTE OF TECHNOLOGY

DEPARTMENT OF MECHANICAL ENGINEERING

IAPMO-India – KIOT, Centre of Excellence

Subject Name	Cost Estimation for a Specific Project				
Name of the Student	KIRUBA S				
Register No	611215114091				
Date	31/1/2019	Duration	60 Minutes	Max.Marks	50
Faculty Name	Marks Awarded				
S. SURENDAR	40		FOUR ZERO		
Faculty Signature					

ANSWER ALL THE QUESTIONS-(50X01=50)

1. To make out an estimate for a work the following data are necessary-Drawing, Specification and _____
   a) materials ✓b) rates c) labours d) transportation
2. _____ is required for preliminary studies of various aspects of a work or project.
   a) Supplementary Estimate b) Plinth Area Estimate c) Revised Estimate ✓d) Abstract Estimate
3. Approximate cost of a hostel building for 100 students's @Rs.10000/- per student works out as Rs. 10 lakhs.
   ✓a) True b) False
4. Per kilometre basis depending on the nature of road, for 10 km of a state highway approx. cost @ Rs. 50000/- per 1 km works out as Rs. 5 lakh.
   a) True ✓b) False
5. The approx. cost of 10 km length of irrigation channel of 3 cu m per sec. capacity @ Rs.70000/- per km works out as Rs.7 lakh. ✓a) True b) False
6. Approx. cost of a bridge of 3 spans of 50 m each span @Rs.30000/- per running m of span comes to 3*50*30000= Rs. 45 lakhs. ✓a) True b) False
7. Approximate cost of sewerage project for a population of one lakh@ Rs. 10/- head works out as Rs. 10 lakh. a) True ✓b) False
8. Cube rate estimate is less accurate as compared to the plinth area estimate as the height of the building is also compared. a) False ✓b) True
9. Cube rate estimate is less accurate as compared to the plinth area estimate as the height of the building is also compared. a) False ✓b) True
10. _____ is prepared on the basis of plinth area of building, the rate being deducted from the cost of similar building having similar specification, heights and construction, in the locality.
    a) Cube Rate Estimate b) Supplementary Estimate
    c) Maintenance Estimate ✓d) Plinth Area Estimate
11. _____is the amount provided in the estimate and bill of quantities for some specialised work to be done by a specialised firm; whose details are not known at the time of preparing estimate.
    a) Prime cost ✓b) Provisional sum c) Capital cost d) Building cost index
12. In this method approx. total length of walls is found in running metre and this total length multiplied by the rate per running metre of wall gives a fairly accurate cost.
    a) Annual repair b)Item rate estimate ✓c) Approximate quantity method estimate
    d) Cubical content estimate
13. _____ Estimate is a detailed estimate and is prepared to maintain the structure or work in proper order and safe condition.
    a) Supplementary and revised estimate ✓b) Maintenance estimate c) Item rate estimate
    d) Revised estimate
14. A large work or project may consists of several building or small works and each of these work is known as_____
    ✓a) sub-work b) sub-project c) sub-head d) sub-construction
15. The term _____ is used to denote a procedure of costing or valuing an item of work on the basis of actual labourers and materials required.
    a) prime cost b) hour-work ✓c) day-work d) sub-work
16. In a reversed Brayton cycle, the heat is absorbed by the air during

Principal,
Knowledge Institute of Technology
Kalipalayam (Po), Salem-637 504

(A) Isentropic compression process (B) Constant pressure cooling process
(C) Isentropic expansion process (D) Constant pressure expansion process

17. Wet bulb temperature is the temperature of air recorded by a thermometer, when
(A) It is not affected by the moisture present in the air
(B) Its bulb is surrounded by a wet cloth exposed to the air
(C) The moisture present in it begins to condense
(D) None of the above

18. The difference between dry bulb temperature and dew point temperature, is called
(A) Dry bulb depression (B) Wet bulb depression
(C) Dew point depression (D) Degree of saturation

19. In mechanical refrigeration system, the refrigerant has the maximum temperature
(A) In evaporator (B) Before expansion valve
(C) Between compressor and condenser (D) Between condenser ar[illegible]orator

20. The central air conditioning system has _____ overall efficiency a[illegible]ompared to individual systems.
(A) Same (B) Lower (C) Higher (D) None of these

21. Moisture should be removed from refrigerants to avoid
(A)Freezing at the expansion valve (B) Restriction to refrigerant flow
(C) Corrosion of steel plates (D) All of these

22. The specific humidity during humidification process
(A) Remains constant (B) Increases (C) Decreases (D) None of these

23. During a refrigeration cycle, heat is rejected by the refrigerant in a
(A) Compressor (B) Condenser (C) Evaporator (D) Exp[illegible]nsion valve

24. In a vapour compression system, the condition of refrigerant is dry saturated v[illegible]pour
(A) Before entering the compressor (B) After leaving the compressor
(C) Before entering the condenser (D) After leaving the condenser

25. During sensible cooling of air, specific humidity
(A) Remains constant (B) Increases (C) Decreases (D) None of these

26. In a psychrometric chart, specific humidity (moisture content) lines are
(A) Vertical and uniformly spaced (B) Horizontal and uniformly spaced
(C) Horizontal and non-uniformly spaced (D) Curved lines

27. The horizontal and non-uniformly spaced lines on a psychrometric chart indicates
(A) Dry bulb temperature (B) Wet bulb temperature
(C) Dew point temperature (D) Specific humidity

28. In a vapour compression refrigeration system, a throttle valve is used in place of an expander because
(A) It considerably reduces mass of the system (B) It improves the C.O.P., as the condenser is small
(C) The positive work in isentropic expansion of liquid is very small (D) It leads to significant cost Reduction

29. Unit of thermal conductivity in M.K.S. units is
(A) K cal/kg m^2 °C (B) K cal m/hr m^2 °C (C) K cal/hr m^2 °C (D) K calm/hr °C

30. Thermal diffusivity is a
(A) Function of temperature (B) Physical property of a substance
(C) Dimensionless parameter (D) All of these

31. Unit of thermal conductivity in S.I. units is
(A) J/m^2 sec (B) J/m °K sec (C) W/m °K (D) Option (B) and (C) above.

32. Which of the following statement is wrong?
(A) The heat transfer in liquid and gases takes place according to convection
(B) The amount of heat flow through a body is dependent upon the material of the body
(C) The thermal conductivity of solid metals increases with rise in temperature
(D) Logarithmic mean temperature difference is not equal to the arithmetic mean temperature difference

33. Thermal conductivity of solid metals with rise in temperature normally
(A) Increases (B) Decreases (C) Remain constant
(D) May increase or decrease depending on temperature

34. In free convection heat transfer transition from laminar to turbulent flow is governed by the critical value of the
(A) Reynold's number (B) Grashoff's number (C) Reynold's number, Grashoff's number

Principal,
[illegible] Institute of Technology
Vakapalavam (Po), Salem-637 504

KNOWLEDGE INSTITUTE OF TECHNOLOGY, SALEM
Department Of Mechanical Engineering

FEEDBACK FORM-CERTIFICATE COURSE

Solid Modeling (Level-1) using NXCAD/CATIA software

Name: R. Kishore Kanna Year/Sem/Sec: III VI

S.No.	List of Content	Strongly Agree	Agree	Neutral	Disagree	Strongly Disagree
1	About Introduction to CATIA V5		✓			
2	Sketcher Workbench		✓			
3	Part Modeling		✓			
4	Assembly Design		✓			
5	Course content and Hands on Experience of CATIA V5		✓			
6	Trainer Explanation level about this course		✓			
7	Have you learned Shortcuts of the Tool and worked out Industry Drawings		✓			
8	Overall Experience about this course		✓			

Suggestion for Improvement

R. Kishore Kanna
Signature of the Candidate

PRINCIPAL,
Knowledge Institute of Technology
Kakapalayam (PO) Salem - 637 504

(D) Prandtl number, Grashoff's number

35. Thermal conductivity of non-metallic amorphous solids with decrease in temperature
(A) Increases (B) Decreases (C) Remain constant
(D) May increase or decrease depending on temperature

36. According to Dalton's law of partial pressures, (where pb = Barometric pressure, pa = Partial pressure of dry air, and pv = Partial pressure of water vapour)
(A) Pb = pa – pv (B) Pb = pa + pv (C) Pb = pa × pv (D) Pb = pa/pv

37. Heat transfer takes place as per
(A) Zeroth law of thermodynamics (B) First law of thermodynamics
(C) Second law of thermodynamics (D) Kirchaffs Law

38. The heat transfer by conduction through a thick sphere is given by
(A) Q = 2πkr1 r2 (T1 - T2)/ (r2 - r1) (B) Q = 4πkr1 r2 (T1 - T2)/ (r2 - r1)
(C) Q = 6πkr1 r2 (T1 - T2)/ (r2 - r1) (D) Q = 8πkr1 r2 (T1 - T2)/ (r2 - r1)

39. When heat is transferred from one particle of hot body to another by actual motion of the heated particles, it is referred to as heat transfer by
(A) Conduction (B) Convection (C) Radiation (D) Conduction and convection

40. Fourier's law of heat conduction is (where Q = Amount of heat flow through the body in unit time, A = Surface area of heat flow, taken at right angles to the direction of heat flow, dT = Temperature difference on the two faces of the body, dx = Thickness of the body, through which the heat flows, taken along the direction of heat flow, and k = Thermal conductivity of the body)
(A) k. A. (dT/dx) (B) k. A. (dx/dT) (C) k. (dT/dx) (D) k. (dx/dT)

41. When the temperatures of a structure both inside and outside are equal, there is _____.
a. no heat transfer b. latent heat transfer to the outside
c. thermal heat transfer of sensible heat d. a lower rate of relative humidity

42. Polyolester (POE) oils stored in plastic containers will _____.
a. separate b. become more alkaline
c. become acidic d. absorb moisture through the plastic

43. R-407C has _____.
a. a foul odor b. to be charged in the vapor phase
c. the ability to fractionate d. no temperature glide

44. What is a carbon footprint?
a. The carbon deposits from burning gasoline.
b. The amount of carbon dioxide that is produced to support your lifestyle.
c. The amount of carbon in the atmosphere produced by the world's lifestyle.
d. The amount of carbon in the stratosphere.

45. What is energy management?
a. A rule that the total amount of energy stays constant in an isolated system over time.
b. Recovering energy lost while using mechanical equipment.
c. Reading the electric and fuel gas meters every month.
d. The monitoring and controlling of energy consuming devices.

46. The function of duct in air conditioning unit is:
(a) air cooling (b) air cleaning (c) air drying (d) air distribution

47. Process of changing solid into vapour state without passing through liquid state is:
(a) super heating (b) sublimation (c) subcooling (d) triple point

48. Amount of heat required to raise the temperature of one unit of substance through 1 degree is called:
(a) C.H.U. (b) B.T.U. (c) Calorie (d) Specific heat

49. The COP of a domestic air conditioning in comparison to domestic refrigerator will be:
(a) same (b) less (c) more (d) depends upon weather conditions

50. Solenoid valve is operated:
(a) electrically (b) by hand (c) by gas pressure (d) by oil pressure

FACULTY I/C **HOD/MECH**

Principal,
Knowledge Institute of Technology
Kalavam (Po), Salem-637 504

KNOWLEDGE INSTITUTE OF TECHNOLOGY

DEPARTMENT OF MECHANICAL ENGINEERING

IAPMO-India – KIOT, Centre of Excellence

Subject Name	Cost Estimation for a Specific Project				
Name of the Student	Logesh J				
Register No	611215114095				
Date	31/01/2019	Duration	60 Minutes	Max.Marks	50
Faculty Name	Marks Awarded				
S. BARANI	33		THIRTY THREE		
Faculty Signature					

ANSWER ALL THE QUESTIONS-(50X01=50)

1. To make out an estimate for a work the following data are necessary-Drawing, Specification and _____
   a) materials b) rates c) labours d) transportation
2. _____ is required for preliminary studies of various aspects of a work or project.
   a) Supplementary Estimate b) Plinth Area Estimate c) Revised Estimate d) Abstract Estimate
3. Approximate cost of a hostel building for 100 students's @Rs.10000/- per student works out as Rs. 10 lakhs.
   a) True b) False
4. Per kilometre basis depending on the nature of road, for 10 km of a state highway approx. cost @ Rs. 50000/- per 1 km works out as Rs. 5 lakh.
   a) True b) False
5. The approx. cost of 10 km length of irrigation channel of 3 cu m per sec. capacity @ Rs.70000/- per km works out as Rs.7 lakh. a) True b) False
6. Approx. cost of a bridge of 3 spans of 50 m each span @Rs.30000/- per running m of span comes to 3*50*30000= Rs. 45 lakhs. a) True b) False
7. Approximate cost of sewerage project for a population of one lakh@ Rs. 10/- head works out as Rs. 10 lakh. a) True b) False
8. Cube rate estimate is less accurate as compared to the plinth area estimate as the height of the building is also compared. a) False b) True
9. Cube rate estimate is less accurate as compared to the plinth area estimate as the height of the building is also compared. a) False b) True
10. _____ is prepared on the basis of plinth area of building, the rate being deducted from the cost of similar building having similar specification, heights and construction, in the locality.
    a) Cube Rate Estimate b) Supplementary Estimate
    c) Maintenance Estimate d) Plinth Area Estimate
11. _____is the amount provided in the estimate and bill of quantities for some specialised work to be done by a specialised firm; whose details are not known at the time of preparing estimate.
    a) Prime cost b) Provisional sum c) Capital cost d) Building cost index
12. In this method approx. total length of walls is found in running metre and this total length multiplied by the rate per running metre of wall gives a fairly accurate cost.
    a) Annual repair b)Item rate estimate c) Approximate quantity method estimate
    d) Cubical content estimate
13. _____ Estimate is a detailed estimate and is prepared to maintain the structure or work in proper order and safe condition.
    a) Supplementary and revised estimate b)Maintenance estimate c) Item rate estimate
    d) Revised estimate
14. A large work or project may consists of several building or small works and each of these work is known as_____
    a) sub-work b) sub-project c) sub-head d) sub-construction
15. The term _____ is used to denote a procedure of costing or valuing an item of work on the basis of actual labourers and materials required.
    a) prime cost b) hour-work c) day-work d) sub-work
16. In a reversed Brayton cycle, the heat is absorbed by the air during

Principal,
Knowledge Institute of Technology,
Kavam (Po), Salem-637 504

(A) Isentropic compression process (B) Constant pressure cooling process
(C) Isentropic expansion process (D) Constant pressure expansion process

17. Wet bulb temperature is the temperature of air recorded by a thermometer, when
(A) It is not affected by the moisture present in the air
(B) Its bulb is surrounded by a wet cloth exposed to the air
(C) The moisture present in it begins to condense
(D) None of the above

18. The difference between dry bulb temperature and dew point temperature, is called
(A) Dry bulb depression (B) Wet bulb depression
(C) Dew point depression (D) Degree of saturation

19. In mechanical refrigeration system, the refrigerant has the maximum temperature
(A) In evaporator (B) Before expansion valve
(C) Between compressor and condenser (D) Between condenser and evaporator

20. The central air conditioning system has _____ overall efficiency as compared to individual systems.
(A) Same (B) Lower (C) Higher (D) None of these

21. Moisture should be removed from refrigerants to avoid
(A) Freezing at the expansion valve (B) Restriction to refrigerant flow
(C) Corrosion of steel plates (D) All of these

22. The specific humidity during humidification process
(A) Remains constant (B) Increases (C) Decreases (D) None of these

23. During a refrigeration cycle, heat is rejected by the refrigerant in a
(A) Compressor (B) Condenser (C) Evaporator (D) Expansion valve

24. In a vapour compression system, the condition of refrigerant is dry saturated vapour
(A) Before entering the compressor (B) After leaving the compressor
(C) Before entering the condenser (D) After leaving the condenser

25. During sensible cooling of air, specific humidity
(A) Remains constant (B) Increases (C) Decreases (D) None of these

26. In a psychrometric chart, specific humidity (moisture content) lines are
(A) Vertical and uniformly spaced (B) Horizontal and uniformly spaced
(C) Horizontal and non-uniformly spaced (D) Curved lines

27. The horizontal and non-uniformly spaced lines on a psychrometric chart indicates
(A) Dry bulb temperature (B) Wet bulb temperature
(C) Dew point temperature (D) Specific humidity

28. In a vapour compression refrigeration system, a throttle valve is used in place of an expander because
(A) It considerably reduces mass of the system (B) It improves the C.O.P., as the condenser is small
(C) The positive work in isentropic expansion of liquid is very small (D) It leads to significant cost Reduction

29. Unit of thermal conductivity in M.K.S. units is
(A) K cal/kg m^2 °C (B) K cal m/hr m^2 °C (C) K cal/hr m^2 °C (D) K calm/hr °C

30. Thermal diffusivity is a
(A) Function of temperature (B) Physical property of a substance
(C) Dimensionless parameter (D) All of these

31. Unit of thermal conductivity in S.I. units is
(A) J/m^2 sec (B) J/m °K sec (C) W/m °K (D) Option (B) and (C) above.

32. Which of the following statement is wrong?
(A) The heat transfer in liquid and gases takes place according to convection
(B) The amount of heat flow through a body is dependent upon the material of the body
(C) The thermal conductivity of solid metals increases with rise in temperature
(D) Logarithmic mean temperature difference is not equal to the arithmetic mean temperature difference

33. Thermal conductivity of solid metals with rise in temperature normally
(A) Increases (B) Decreases (C) Remain constant
(D) May increase or decrease depending on temperature

Principal,
Knowledge Institute of Technology
Kanjikovil (Po), Salem-637 504

34. In free convection heat transfer transition from laminar to turbulent flow is governed by the critical value of the
(A) Reynold's number (B) Grashoff's number (C) Reynold's number, Grashoff's number

(D) Prandtl number, Grashoff's number

35. Thermal conductivity of non-metallic amorphous solids with decrease in temperature
    (A) Increases (B) Decreases (C) Remain constant
    (D) May increase or decrease depending on temperature
36. According to Dalton's law of partial pressures, (where pb = Barometric pressure, pa = Partial pressure of dry air, and pv = Partial pressure of water vapour)
    (A) Pb = pa – pv (B) Pb = pa + pv (C) Pb = pa × pv (D) Pb = pa/pv
37. Heat transfer takes place as per
    (A) Zeroth law of thermodynamics (B) First law of thermodynamics
    (C) Second law of thermodynamics (D) Kirchaffs Law
38. The heat transfer by conduction through a thick sphere is given by
    (A) Q = 2πkr1 r2 (T1 - T2)/ (r2 - r1) (B) Q = 4πkr1 r2 (T1 - T2)/ (r2 - r1)
    (C) Q = 6πkr1 r2 (T1 - T2)/ (r2 - r1) (D) Q = 8πkr1 r2 (T1 - T2)/ (r2 - r1)
39. When heat is transferred from one particle of hot body to another by actual motion of the heated particles, it is referred to as heat transfer by
    (A) Conduction (B) Convection (C) Radiation (D) Conduction and convection
40. Fourier's law of heat conduction is (where Q = Amount of heat flow through the body in unit time, A = Surface area of heat flow, taken at right angles to the direction of heat flow, dT = Temperature difference on the two faces of the body, dx = Thickness of the body, through which the heat flows, taken along the direction of heat flow, and k = Thermal conductivity of the body)
    (A) k. A. (dT/dx) (B) k. A. (dx/dT) (C) k. (dT/dx) (D) k. (dx/dT)
41. When the temperatures of a structure both inside and outside are equal, there is _____.
    a. no heat transfer b. latent heat transfer to the outside
    c. thermal heat transfer of sensible heat d. a lower rate of relative humidity
42. Polyolester (POE) oils stored in plastic containers will _____.
    a. separate b. become more alkaline
    c. become acidic d. absorb moisture through the plastic
43. R-407C has _____.
    a. a foul odor b. to be charged in the vapor phase
    c. the ability to fractionate d. no temperature glide
44. What is a carbon footprint?
    a. The carbon deposits from burning gasoline.
    b. The amount of carbon dioxide that is produced to support your lifestyle.
    c. The amount of carbon in the atmosphere produced by the world's lifestyle.
    d. The amount of carbon in the stratosphere.
45. What is energy management?
    a. A rule that the total amount of energy stays constant in an isolated system over time.
    b. Recovering energy lost while using mechanical equipment.
    c. Reading the electric and fuel gas meters every month.
    d. The monitoring and controlling of energy consuming devices.
46. The function of duct in air conditioning unit is:
    (a) air cooling (b) air cleaning (c) air drying (d) air distribution
47. Process of changing solid into vapour state without passing through liquid state is:
    (a) super heating (b) sublimation (c) subcooling (d) triple point
48. Amount of heat required to raise the temperature of one unit of substance through 1 degree is called:
    (a) C.H.U. (b) B.T.U. (c) Calorie (d) Specific heat
49. The COP of a domestic air conditioning in comparison to domestic refrigerator will be:
    (a) same (b) less (c) more (d) depends upon weather conditions
50. Solenoid valve is operated:
    (a) electrically (b) by hand (c) by gas pressure (d) by oil pressure

FACULTY I/C

Principal,
Knowledge Institute of Technology
...nalayam (Po), Salem-637 504

HOD/MECH

KNOWLEDGE INSTITUTE OF TECHNOLOGY

DEPARTMENT OF MECHANICAL ENGINEERING

IAPMO-India – KIOT, Centre of Excellence

Subject Name	Cost Estimation for a Specific Project				
Name of the Student	Manikandan.S				
Register No	611215114103				
Date	31/01/2019	Duration	60 Minutes	Max.Marks	50
Faculty Name	Marks Awarded				
Faculty Signature	44				

ANSWER ALL THE QUESTIONS-(50X01=50)

1. To make out an estimate for a work the following data are necessary-Drawing, Specification and _____
   a) materials b) rates c) labours d) transportation
2. _____ is required for preliminary studies of various aspects of a work or project.
   a) Supplementary Estimate b) Plinth Area Estimate c) Revised Estimate d) Abstract Estimate
3. Approximate cost of a hostel building for 100 students's @Rs.10000/- per student works out as Rs. 10 lakhs.
   a) True b) False
4. Per kilometre basis depending on the nature of road, for 10 km of a state highway approx. cost @ Rs. 50000/- per 1 km works out as Rs. 5 lakh.
   a) True b) False
5. The approx. cost of 10 km length of irrigation channel of 3 cu m per sec. capacity @ Rs.70000/- per km works out as Rs.7 lakh. a) True b) False
6. Approx. cost of a bridge of 3 spans of 50 m each span @Rs.30000/- per running m of span comes to 3*50*30000= Rs. 45 lakhs. a) True b) False
7. Approximate cost of sewerage project for a population of one lakh@ Rs. 10/- head works out as Rs. 10 lakh. a) True b) False
8. Cube rate estimate is less accurate as compared to the plinth area estimate as the height of the building is also compared. a) False b) True
9. Cube rate estimate is less accurate as compared to the plinth area estimate as the height of the building is also compared. a) False b) True
10. _____ is prepared on the basis of plinth area of building, the rate being deducted from the cost of similar building having similar specification, heights and construction, in the locality.
    a) Cube Rate Estimate b) Supplementary Estimate
    c) Maintenance Estimate d) Plinth Area Estimate
11. _____is the amount provided in the estimate and bill of quantities for some specialised work to be done by a specialised firm; whose details are not known at the time of preparing estimate.
    a) Prime cost b) Provisional sum c) Capital cost d) Building cost index
12. In this method approx. total length of walls is found in running metre and this total length multiplied by the rate per running metre of wall gives a fairly accurate cost.
    a) Annual repair b)Item rate estimate c) Approximate quantity method estimate
    d) Cubical content estimate
13. _____ Estimate is a detailed estimate and is prepared to maintain the structure or work in proper order and safe condition.
    a) Supplementary and revised estimate b)Maintenance estimate c) Item rate estimate
    d) Revised estimate
14. A large work or project may consists of several building or small works and each of these work is known as_____
    a) sub-work b) sub-project c) sub-head d) sub-construction
15. The term _____ is used to denote a procedure of costing or valuing an item of work on the basis of actual labourers and materials required.
    a) prime cost b) hour-work c) day-work d) sub-work
16. In a reversed Brayton cycle, the heat is absorbed by the air during

Principal,
Knowledge Institute of Technology
Kakapalayam (Po), Salem-637 504

(A) Isentropic compression process (B) Constant pressure cooling process
(C) Isentropic expansion process (D) Constant pressure expansion process

17. Wet bulb temperature is the temperature of air recorded by a thermometer, when
(A) It is not affected by the moisture present in the air
(B) Its bulb is surrounded by a wet cloth exposed to the air
(C) The moisture present in it begins to condense
(D) None of the above

18. The difference between dry bulb temperature and dew point temperature, is called
(A) Dry bulb depression (B) Wet bulb depression
(C) Dew point depression (D) Degree of saturation

19. In mechanical refrigeration system, the refrigerant has the maximum temperature
(A) In evaporator (B) Before expansion valve
(C) Between compressor and condenser (D) Between condenser and evaporator

20. The central air conditioning system has _____ overall efficiency as compared to individual systems.
(A) Same (B) Lower (C) Higher (D) None of these

21. Moisture should be removed from refrigerants to avoid
(A)Freezing at the expansion valve (B) Restriction to refrigerant flow
(C) Corrosion of steel plates (D) All of these

22. The specific humidity during humidification process
(A) Remains constant (B) Increases (C) Decreases (D) None of these

23. During a refrigeration cycle, heat is rejected by the refrigerant in a
(A) Compressor (B) Condenser (C) Evaporator (D) Expansion valve

24. In a vapour compression system, the condition of refrigerant is dry saturated vapour
(A) Before entering the compressor (B) After leaving the compressor
(C) Before entering the condenser (D) After leaving the condenser

25. During sensible cooling of air, specific humidity
(A) Remains constant (B) Increases (C) Decreases (D) None of these

26. In a psychrometric chart, specific humidity (moisture content) lines are
(A) Vertical and uniformly spaced (B) Horizontal and uniformly spaced
(C) Horizontal and non-uniformly spaced (D) Curved lines

27. The horizontal and non-uniformly spaced lines on a psychrometric chart indicates
(A) Dry bulb temperature (B) Wet bulb temperature
(C) Dew point temperature (D) Specific humidity

28. In a vapour compression refrigeration system, a throttle valve is used in place of an expander because
(A) It considerably reduces mass of the system (B) It improves the C.O.P., as the condenser is small
(C) The positive work in isentropic expansion of liquid is very small (D) It leads to significant cost Reduction

29. Unit of thermal conductivity in M.K.S. units is
(A) K cal/kg m^2 °C (B) K cal m/hr m^2 °C (C) K cal/hr m^2 °C (D) K calm/hr °C

30. Thermal diffusivity is a
(A) Function of temperature (B) Physical property of a substance
(C) Dimensionless parameter (D) All of these

31. Unit of thermal conductivity in S.I. units is
(A) J/m^2 sec (B) J/m °K sec (C) W/m °K (D) Option (B) and (C) above.

32. Which of the following statement is wrong?
(A) The heat transfer in liquid and gases takes place according to convection
(B) The amount of heat flow through a body is dependent upon the material of the body
(C) The thermal conductivity of solid metals increases with rise in temperature
(D) Logarithmic mean temperature difference is not equal to the arithmetic mean temperature difference

33. Thermal conductivity of solid metals with rise in temperature normally
(A) Increases (B) Decreases (C) Remain constant
(D) May increase or decrease depending on temperature

34. In free convection heat transfer transition from laminar to turbulent flow is governed by the critical value of the
(A) Reynold's number (B) Grashoff's number (C) Reynold's number, Grashoff's number

Principal,
Knowledge Institute of Technology
Kakapalayam (Po), Salem-637 504

(D) Prandtl number, Grashoff's number

35. Thermal conductivity of non-metallic amorphous solids with decrease in temperature
    (A) Increases (B) Decreases (C) Remain constant
    (D) May increase or decrease depending on temperature
36. According to Dalton's law of partial pressures, (where pb = Barometric pressure, pa = Partial pressure of dry air, and pv = Partial pressure of water vapour)
    (A) Pb = pa – pv (B) Pb = pa + pv (C) Pb = pa × pv (D) Pb = pa/pv
37. Heat transfer takes place as per
    (A) Zeroth law of thermodynamics (B) First law of thermodynamics
    (C) Second law of thermodynamics (D) Kirchaffs Law
38. The heat transfer by conduction through a thick sphere is given by
    (A) Q = 2πkr1 r2 (T1 - T2)/ (r2 - r1) (B) Q = 4πkr1 r2 (T1 - T2)/ (r2 - r1)
    (C) Q = 6πkr1 r2 (T1 - T2)/ (r2 - r1) (D) Q = 8πkr1 r2 (T1 - T2)/ (r2 - r1)
39. When heat is transferred from one particle of hot body to another by actual motion of the heated particles, it is referred to as heat transfer by
    (A) Conduction (B) Convection (C) Radiation (D) Conduction and convection
40. Fourier's law of heat conduction is (where Q = Amount of heat flow through the body in unit time, A = Surface area of heat flow, taken at right angles to the direction of heat flow, dT = Temperature difference on the two faces of the body, dx = Thickness of the body, through which the heat flows, taken along the direction of heat flow, and k = Thermal conductivity of the body)
    (A) k. A. (dT/dx) (B) k. A. (dx/dT) (C) k. (dT/dx) (D) k. (dx/dT)
41. When the temperatures of a structure both inside and outside are equal, there is _____.
    a. no heat transfer b. latent heat transfer to the outside
    c. thermal heat transfer of sensible heat d. a lower rate of relative humidity
42. Polyolester (POE) oils stored in plastic containers will _____.
    a. separate b. become more alkaline
    c. become acidic d. absorb moisture through the plastic
43. R-407C has _____-.
    a. a foul odor b. to be charged in the vapor phase
    c. the ability to fractionate d. no temperature glide
44. What is a carbon footprint?
    a. The carbon deposits from burning gasoline.
    b. The amount of carbon dioxide that is produced to support your lifestyle.
    c. The amount of carbon in the atmosphere produced by the world's lifestyle.
    d. The amount of carbon in the stratosphere.
45. What is energy management?
    a. A rule that the total amount of energy stays constant in an isolated system over time.
    b. Recovering energy lost while using mechanical equipment.
    c. Reading the electric and fuel gas meters every month.
    d. The monitoring and controlling of energy consuming devices.
46. The function of duct in air conditioning unit is:
    (a) air cooling (b) air cleaning (c) air drying (d) air distribution
47. Process of changing solid into vapour state without passing through liquid state is:
    (a) super heating (b) sublimation (c) subcooling (d) triple point
48. Amount of heat required to raise the temperature of one unit of substance through 1 degree is called:
    (a) C.H.U. (b) B.T.U. (c) Calorie (d) Specific heat
49. The COP of a domestic air conditioning in comparison to domestic refrigerator will be:
    (a) same (b) less (c) more (d) depends upon weather conditions
50. Solenoid valve is operated:
    (a) electrically (b) by hand (c) by gas pressure (d) by oil pressure

FACULTY I/C

Principal,
Knowledge Institute of Technology
Kakapalayam (Po), Salem-637 504

HOD/MECH

KNOWLEDGE INSTITUTE OF TECHNOLOGY

DEPARTMENT OF MECHANICAL ENGINEERING

IAPMO-India – KIOT, Centre of Excellence

Subject Name	Cost Estimation for a Specific Project				
Name of the Student	Sriram. N				
Register No	611215114206				
Date	31/1/2019	Duration	60 Minutes	Max.Marks	50
Faculty Name	Marks Awarded				
Faculty Signature	36		THIRTY SIX		

ANSWER ALL THE QUESTIONS-(50X01=50)

1. To make out an estimate for a work the following data are necessary-Drawing, Specification and _____
   a) materials b) rates c) labours d) transportation
2. _____ is required for preliminary studies of various aspects of a work or project.
   a) Supplementary Estimate b) Plinth Area Estimate c) Revised Estimate d) Abstract Estimate
3. Approximate cost of a hostel building for 100 students's @Rs.10000/- per student works out as Rs. 10 lakhs.
   a) True b) False
4. Per kilometre basis depending on the nature of road, for 10 km of a state highway approx. cost @ Rs. 50000/- per 1 km works out as Rs. 5 lakh.
   a) True b) False
5. The approx. cost of 10 km length of irrigation channel of 3 cu m per sec. capacity @ Rs.70000/- per km works out as Rs.7 lakh. a) True b) False
6. Approx. cost of a bridge of 3 spans of 50 m each span @Rs.30000/- per running m of span comes to 3*50*30000= Rs. 45 lakhs. a) True b) False
7. Approximate cost of sewerage project for a population of one lakh@ Rs. 10/- head works out as Rs. 10 lakh. a) True b) False
8. Cube rate estimate is less accurate as compared to the plinth area estimate as the height of the building is also compared. a) False b) True
9. Cube rate estimate is less accurate as compared to the plinth area estimate as the height of the building is also compared. a) False b) True
10. _____ is prepared on the basis of plinth area of building, the rate being deducted from the cost of similar building having similar specification, heights and construction, in the locality.
    a) Cube Rate Estimate b) Supplementary Estimate
    c) Maintenance Estimate d) Plinth Area Estimate
11. _____is the amount provided in the estimate and bill of quantities for some specialised work to be done by a specialised firm; whose details are not known at the time of preparing estimate.
    a) Prime cost b) Provisional sum c) Capital cost d) Building cost index
12. In this method approx. total length of walls is found in running metre and this total length multiplied by the rate per running metre of wall gives a fairly accurate cost.
    a) Annual repair b)Item rate estimate c) Approximate quantity method estimate
    d) Cubical content estimate
13. _____ Estimate is a detailed estimate and is prepared to maintain the structure or work in proper order and safe condition.
    a) Supplementary and revised estimate b)Maintenance estimate c) Item rate estimate
    d) Revised estimate
14. A large work or project may consists of several building or small works and each of these work is known as_____
    a) sub-work b) sub-project c) sub-head d) sub-construction
15. The term _____ is used to denote a procedure of costing or valuing an item of work on the basis of actual labourers and materials required.
    a) prime cost b) hour-work c) day-work d) sub-work
16. In a reversed Brayton cycle, the heat is absorbed by the air during

Principal,
Knowledge Institute of Technology
Kakapalayam (Po), Salem-637 504

(A) Isentropic compression process (B) Constant pressure cooling process
(C) Isentropic expansion process (D) Constant pressure expansion process

17. Wet bulb temperature is the temperature of air recorded by a thermometer, when
(A) It is not affected by the moisture present in the air
(B) Its bulb is surrounded by a wet cloth exposed to the air
(C) The moisture present in it begins to condense
(D) None of the above

18. The difference between dry bulb temperature and dew point temperature, is called
(A) Dry bulb depression (B) Wet bulb depression
(C) Dew point depression (D) Degree of saturation

19. In mechanical refrigeration system, the refrigerant has the maximum temperature
(A) In evaporator (B) Before expansion valve
(C) Between compressor and condenser (D) Between condenser and evaporator

20. The central air conditioning system has _____ overall efficiency as compared to individual systems.
(A) Same (B) Lower (C) Higher (D) None of these

21. Moisture should be removed from refrigerants to avoid
(A) Freezing at the expansion valve (B) Restriction to refrigerant flow
(C) Corrosion of steel plates (D) All of these

22. The specific humidity during humidification process
(A) Remains constant (B) Increases (C) Decreases (D) None of these

23. During a refrigeration cycle, heat is rejected by the refrigerant in a
(A) Compressor (B) Condenser (C) Evaporator (D) Expansion valve

24. In a vapour compression system, the condition of refrigerant is dry saturated vapour
(A) Before entering the compressor (B) After leaving the compressor
(C) Before entering the condenser (D) After leaving the condenser

25. During sensible cooling of air, specific humidity
(A) Remains constant (B) Increases (C) Decreases (D) None of these

26. In a psychrometric chart, specific humidity (moisture content) lines are
(A) Vertical and uniformly spaced (B) Horizontal and uniformly spaced
(C) Horizontal and non-uniformly spaced (D) Curved lines

27. The horizontal and non-uniformly spaced lines on a psychrometric chart indicates
(A) Dry bulb temperature (B) Wet bulb temperature
(C) Dew point temperature (D) Specific humidity

28. In a vapour compression refrigeration system, a throttle valve is used in place of an expander because
(A) It considerably reduces mass of the system (B) It improves the C.O.P., as the condenser is small
(C) The positive work in isentropic expansion of liquid is very small (D) It leads to significant cost Reduction

29. Unit of thermal conductivity in M.K.S. units is
(A) K cal/kg m^2 °C (B) K cal m/hr m^2 °C (C) K cal/hr m^2 °C (D) K calm/hr °C

30. Thermal diffusivity is a
(A) Function of temperature (B) Physical property of a substance
(C) Dimensionless parameter (D) All of these

31. Unit of thermal conductivity in S.I. units is
(A) J/m^2 sec (B) J/m °K sec (C) W/m °K (D) Option (B) and (C) above.

32. Which of the following statement is wrong?
(A) The heat transfer in liquid and gases takes place according to convection
(B) The amount of heat flow through a body is dependent upon the material of the body
(C) The thermal conductivity of solid metals increases with rise in temperature
(D) Logarithmic mean temperature difference is not equal to the arithmetic mean temperature difference

33. Thermal conductivity of solid metals with rise in temperature normally
(A) Increases (B) Decreases (C) Remain constant
(D) May increase or decrease depending on temperature

34. In free convection heat transfer transition from laminar to turbulent flow is governed by the critical value of the
(A) Reynold's number (B) Grashoff's number (C) Reynold's number, Grashoff's number

Principal,
Institute of Technology
Kakapalayam (Po), Salem-637 504

(D) Prandtl number, Grashoff's number

35. Thermal conductivity of non-metallic amorphous solids with decrease in temperature
    (A) Increases (B) Decreases (C) Remain constant
    (D) May increase or decrease depending on temperature
36. According to Dalton's law of partial pressures, (where pb = Barometric pressure, pa = Partial pressure of dry air, and pv = Partial pressure of water vapour)
    (A) Pb = pa – pv (B) Pb = pa + pv (C) Pb = pa × pv (D) Pb = pa/pv
37. Heat transfer takes place as per
    (A) Zeroth law of thermodynamics (B) First law of thermodynamics
    (C) Second law of thermodynamics (D) Kirchaffs Law
38. The heat transfer by conduction through a thick sphere is given by
    (A) Q = 2πkr1 r2 (T1 - T2)/ (r2 - r1) (B) Q = 4πkr1 r2 (T1 - T2)/ (r2 - r1)
    (C) Q = 6πkr1 r2 (T1 - T2)/ (r2 - r1) (D) Q = 8πkr1 r2 (T1 - T2)/ (r2 - r1)
39. When heat is transferred from one particle of hot body to another by actual motion of the heated particles, it is referred to as heat transfer by
    (A) Conduction (B) Convection (C) Radiation (D) Conduction and convection
40. Fourier's law of heat conduction is (where Q = Amount of heat flow through the body in unit time, A = Surface area of heat flow, taken at right angles to the direction of heat flow, dT = Temperature difference on the two faces of the body, dx = Thickness of the body, through which the heat flows, taken along the direction of heat flow, and k = Thermal conductivity of the body)
    (A) k. A. (dT/dx) (B) k. A. (dx/dT) (C) k. (dT/dx) (D) k. (dx/dT)
41. When the temperatures of a structure both inside and outside are equal, there is _____.
    a. no heat transfer b. latent heat transfer to the outside
    c. thermal heat transfer of sensible heat d. a lower rate of relative humidity
42. Polyolester (POE) oils stored in plastic containers will _____.
    a. separate b. become more alkaline
    c. become acidic d. absorb moisture through the plastic
43. R-407C has _____.
    a. a foul odor b. to be charged in the vapor phase
    c. the ability to fractionate d. no temperature glide
44. What is a carbon footprint?
    a. The carbon deposits from burning gasoline.
    b. The amount of carbon dioxide that is produced to support your lifestyle.
    c. The amount of carbon in the atmosphere produced by the world's lifestyle.
    d. The amount of carbon in the stratosphere.
45. What is energy management?
    a. A rule that the total amount of energy stays constant in an isolated system over time.
    b. Recovering energy lost while using mechanical equipment.
    c. Reading the electric and fuel gas meters every month.
    d. The monitoring and controlling of energy consuming devices.
46. The function of duct in air conditioning unit is:
    (a) air cooling (b) air cleaning (c) air drying (d) air distribution
47. Process of changing solid into vapour state without passing through liquid state is:
    (a) Super heating (b) sublimation (c) subcooling (d) triple point
48. Amount of heat required to raise the temperature of one unit of substance through 1 degree is called:
    (a) C.H.U. (b) B.T.U. (c) Calorie (d) Specific heat
49. The COP of a domestic air conditioning in comparison to domestic refrigerator will be:
    (a) same (b) less (c) more (d) depends upon weather conditions
50. Solenoid valve is operated:
    (a) electrically (b) by hand (c) by gas pressure (d) by oil pressure

FACULTY I/C

Principal,
Knowledge Institute of Technology
Kanalavam (Po), Salem-637 504

HOD/MECH

KNOWLEDGE INSTITUTE OF TECHNOLOGY, SALEM-637504

DEPARTMENT OF MECHANICAL ENGINEERING

CENTER FOR HEATING VENTILATION AND AIR CONDITIONING

BATCH- (2015-2019) AY: 2018-19

Cost Estimation for a Specific Project System- Mark Statement **Max.Marks:50**

Year/ Sem: IV / VIII **Date:01.02.2019**

S.No.	Register Number	Student Name	Mark Secured	Result Status
1.	611215114001	ABISHEK HUSSAIN J	43	PASS
2.	611215114002	ABISHIEK B	41	PASS
3.	611215114003	ADITHYA R	36	PASS
4.	611215114004	ADITYA R	37	PASS
5.	611215114011	ARULBALAJI S	41	PASS
6.	611215114013	ARUNACHALAM K	40	PASS
7.	611215114014	ARUNKUMAR P	38	PASS
8.	611215114016	ASIK RAM K P	28	PASS
9.	611215114027	CHANDRAPRAKASH K	33	PASS
10.	611215114039	DINESH.P	32	PASS
11.	611215114046	GOKUL S	31	PASS
12.	611215114048	GOKULRAJ S	35	PASS
13.	611215114050	GOPIKANNAN R	43	PASS
14.	611215114051	GOVINDARAJ S	41	PASS
15.	611215114079	KARTHIKEYAN M	36	PASS
16.	611215114083	KAVIN T	37	PASS
17.	611215114089	KESAVANATHAN B	41	PASS
18.	611215114091	KIRUBA S	40	PASS
19.	611215114092	KISHORE K	35	PASS
20.	611215114093	LINGESH K	28	PASS
21.	611215114094	LOGANADHAN R	31	PASS
22.	611215114095	LOGESH J	33	PASS
23.	611215114096	LOGESH M	36	PASS
24.	611215114097	LOGESHWARAN S	32	PASS
25.	611215114098	MADHANKUMAR C	30	PASS
26.	611215114099	MADHAVANATH J M	33	PASS
27.	611215114103	MANIKANDAN S	44	PASS
28.	611215114104	MANISHKUMAR K	40	PASS
29.	611215114105	MANO K	36	PASS
30.	611215114108	MANOJ KUMAR S	38	PASS
31.	611215114116	MOHAN A K	31	PASS
32.	611215114119	MOHANKUMAR R	33	PASS
33.	611215114121	MOHAN KUMAR A P	36	PASS
34.	611215114123	MUGUNTHA ADITYA R	36	PASS
35.	611215114124	MURALI R	38	PASS
36.	611215114128	MUTHUKUMAR S	41	PASS
37.	611215114136	NIRMAL S	29	PASS
38.	611215114146	POTHIGAI SELVAN M	28	PASS
39.	611215114192	SATHISH KUMAR C	33	PASS
40.	611215114206	SRIRAM N	36	PASS
41.	611215114218	TAMILSELVAN S	32	PASS
42.	611215114244	WINSLETVASANTHRAAJ T S	30	PASS
43.	611215114341	VENKATESHWARAN M	33	PASS

Note: Minimum 25 marks will be considered as pass mark for this certification course.

FACULTY I/C **HOD/MECH** **PRINCIPAL**

Principal,
Knowledge Institute of Technology

KNOWLEDGE INSTITUTE OF TECHNOLOGY, SALEM
Department of Mechanical Engineering

FEEDBACK FORM
CERTIFICATION COURSE (HVAC)

Academic Year: 2018-19 Date: 28/01/2019

		Strongly agree	Agree	Neutral	Disagree	Strongly disagree
1	About Teaching Methodology			✓		
2	About training handled by faculty			✓		
3	About Practical Session		✓			
4	About Industries Practice		✓			
5	Knowledge Beyond the syllabus			✓		
6	Overall Experience about this course		✓			

Suggestion for Improvement:

- industrial visit is need
- Practical example is need.

Student Signature: R. Gopinath (R. Gopinathan)

Principal,
Knowledge Institute of Technology
Kakapalayam (Po), Salem-637 504

KNOWLEDGE INSTITUTE OF TECHNOLOGY, SALEM
Department of Mechanical Engineering

FEEDBACK FORM
CERTIFICATION COURSE (HVAC)

Academic Year: 2018-19

Date: 28/1/2019

		Strongly agree	Agree	Neutral	Disagree	Strongly disagree
1	About Teaching Methodology		✓			
2	About training handled by faculty			✓		
3	About Practical Session		✓			
4	About Industries Practice	✓				
5	Knowledge Beyond the syllabus		✓			
6	Overall Experience about this course			✓		

Suggestion for Improvement:

Need More industrial Visit.

Student Signature:	KIRUPAS (KIRUPAS)

Principal,
Knowledge Institute of Technology
Kakapalayam (Po), Salem-6

KNOWLEDGE INSTITUTE OF TECHNOLOGY, SALEM
Department of Mechanical Engineering

FEEDBACK FORM
CERTIFICATION COURSE (HVAC)

Academic Year: 2018-19

Date: 28/01/2019

		Strongly agree	Agree	Neutral	Disagree	Strongly disagree
1	About Teaching Methodology			✓		
2	About training handled by faculty		✓			
3	About Practical Session				✓	
4	About Industries Practice			✓		
5	Knowledge Beyond the syllabus			✓		
6	Overall Experience about this course			✓		

Suggestion for Improvement:

i) Need more practical session.

Student Signature:	Lokesh (Logesh.S)

Principal,
Knowledge Institute of Technology
Kanjaiyam (Po), Salem-637 504

KNOWLEDGE INSTITUTE OF TECHNOLOGY, SALEM
Department of Mechanical Engineering

FEEDBACK FORM
CERTIFICATION COURSE (HVAC)

Academic Year: 2018-19 Date: 28/01/2019

		Strongly agree	Agree	Neutral	Disagree	Strongly disagree
1	About Teaching Methodology			✓		
2	About training handled by faculty			✓		
3	About Practical Session		✓			
4	About Industries Practice			✓		
5	Knowledge Beyond the syllabus		✓			
6	Overall Experience about this course		✓			

Suggestion for Improvement:

⇒ Need More Industrial Visits.

Student Signature:	Manikandan S [MANI KANDAN.S]

Principal,
Knowledge Institute of Technology,
Kakapalayam (Po), Salem-637 504.

KNOWLEDGE INSTITUTE OF TECHNOLOGY, SALEM
Department of Mechanical Engineering

FEEDBACK FORM
CERTIFICATION COURSE (HVAC)

Academic Year: 2018-19

Date: 28/1/2019

		Strongly agree	Agree	Neutral	Disagree	Strongly disagree
1	About Teaching Methodology	✓				
2	About training handled by faculty		✓			
3	About Practical Session			✓		
4	About Industries Practice			✓		
5	Knowledge Beyond the syllabus		✓			
6	Overall Experience about this course			✓		

Suggestion for Improvement:

* Need to visit
* Improve the practical sessions

Student Signature:	Sriram.N (Sriram.N)

Principal,
Knowledge Institute of Technology
Kakapalayam (Po), Salem-637 504.

IAPMO-INDIA & KNOWLEDGE INSTITUTE OF TECHNOLOGY

DEPARTMENT OF MECHANICAL ENGINEERING

Certificate of Completion

This certificate is awarded to

CHANDRAPRAKASH K (611215114027)

In recognition of sucessful completion of

"*Cost Estimation for a Specific Project System*"

Conducted by "IIK-Center" from 02.01.2019 to 28.01.2019 Department of Mechanical Engineering, Knowledge Institute of Technology salem, Tamilnadu, India.

Principal,
Knowledge Institute of Technology
Kakapalayam (Po), Salem-637 504

HOD/Mech

Principal

IAPMO-INDIA & KNOWLEDGE INSTITUTE OF TECHNOLOGY

DEPARTMENT OF MECHANICAL ENGINEERING

Certificate of Completion

This certificate is awarded to

KAVIN T (611215114083)

In recognition of sucessful completion of

"*Cost Estimation for a Specific Project System*"

Conducted by "IIK-Center" from 02.01.2019 to 28.01.2019 Department of Mechanical Engineering, Knowledge Institute of Technology salem, Tamilnadu, India.

Principal,
Knowledge Institute of Technology,
(Po), Salem-637 504.

HOD/Mech

Principal

IAPMO-INDIA & KNOWLEDGE INSTITUTE OF TECHNOLOGY

DEPARTMENT OF MECHANICAL ENGINEERING

Certificate of Completion

This certificate is awarded to

LINGESH K (611215114093)

In recognition of sucessful completion of

"*Cost Estimation for a Specific Project System*"

Conducted by "IIK-Center" from 02.01.2019 to 28.01.2019 Department of Mechanical Engineering, Knowledge Institute of Technology salem, Tamilnadu, India.

Principal,
Knowledge Institute of Technology,
[illegible]am (Po), Salem-637 504.

HOD/Mech

Principal

IAPMO-INDIA & KNOWLEDGE INSTITUTE OF TECHNOLOGY

DEPARTMENT OF MECHANICAL ENGINEERING

Certificate of Completion

This certificate is awarded to

LOGESHWARAN S (611215114097)

In recognition of sucessful completion of

"Cost Estimation for a Specific Project System"

Conducted by "IIK-Center" from 02.01.2019 to 28.01.2019 Department of Mechanical Engineering, Knowledge Institute of Technology salem, Tamilnadu, India.

HOD/Mech

Principal,
Knowledge Institute of Technology
Kakapalayam (Po), Salem-637 504

Principal

IAPMO-INDIA & KNOWLEDGE INSTITUTE OF TECHNOLOGY

DEPARTMENT OF MECHANICAL ENGINEERING

Certificate of Completion

This certificate is awarded to

MOHANKUMAR R (611214114119)

In recognition of sucessful completion of

"*Cost Estimation for a Specific Project System*"

Conducted by "IIK-Center" from 02.01.2019 to 28.01.2019 Department of Mechanical Engineering, Knowledge Institute of Technology salem, Tamilnadu, India.

Principal,
Knowledge Institute of Technology,
Kakapalayam (Po), Salem-637 504.

HOD/Mech

Principal

KNOWLEDGE INSTITUTE OF TECHNOLOGY, SALEM-637504

DEPARTMENT OF MECHANICAL ENGINEERING

REPORT OF THE EVENT (Module:2)

Date	:	01.02.2019 to 21.02.2019	**Resource person**	:	**Mr.R.Isaac** Assistant Professor, Department of Mechanical Engineering, Knowledge Institute of Technology
Time	:	05.00 pm to 07.00 pm & 30 Hours	**Title**	:	**Components sizing and selection for chilled water type HVAC system**
Venue	:	A311, KIOT	**No. of Participants**	:	42

1. He explained about that, what are the factors should consider while calculate cooling load.
2. He also explained about chilled water system and its applications.

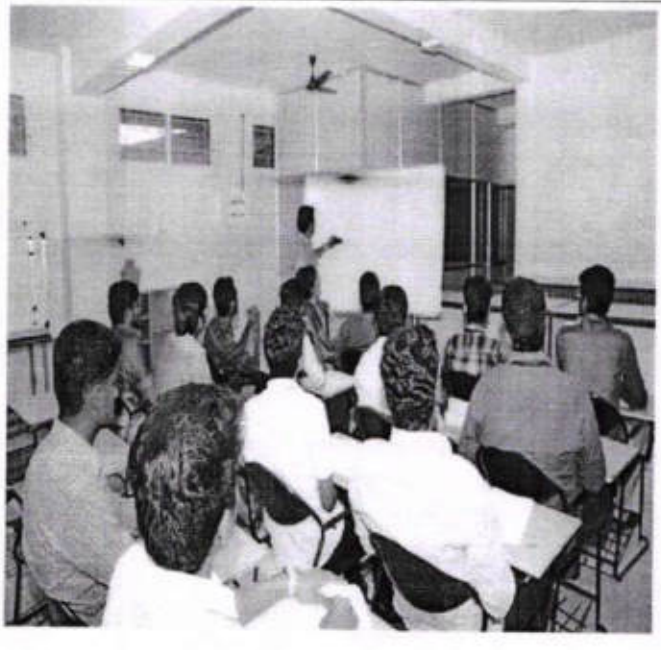

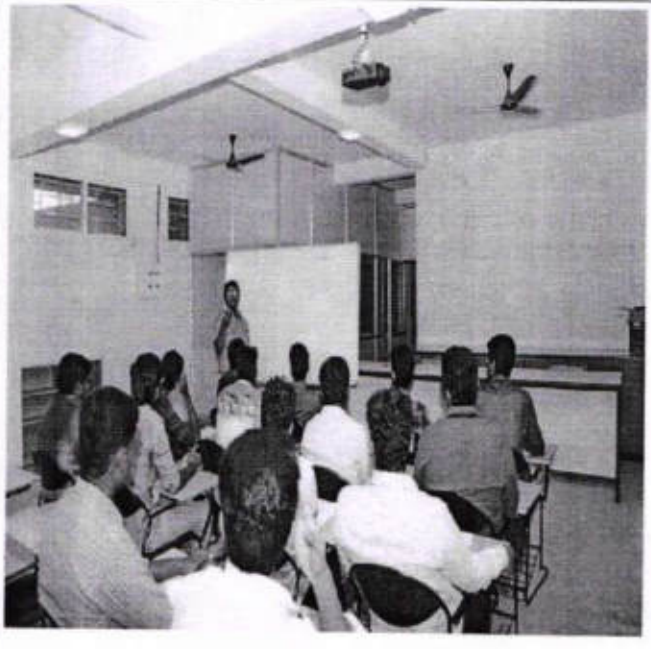

Encl: Circular / Brochure / Attendance Sheet

Principal,
Knowledge Institute of Technology,
Kakapalayam (Po), Salem-637 504.

KNOWLEDGE INSTITUTE OF TECHNOLOGY, SALEM - 637 504

CIRCULAR

Circular No.	KIOT/MECH/IAPMO/2018-19/05	**Date**	21.01.2019
To	All Faculty & Third year students of Mechanical Engineering		
Subject	**Components sizing and selection for chilled water type HVAC system**- IAPMO - Certification Course - Reg.		
Circular issued by	IIK (IAPMO-India-KIOT) center		

We have planned to conduct, HVAC Training on **Components sizing and selection for chilled water type HVAC system** from 01.02.2019 for Final year Mechanical Engineering students through IIK (IAPMO-India-KIOT) center in this Academic Year (2018-2019).

Venue: A310

Time: 05.00pm to 07.00pm

Encl: Name list of shortlisted students.

SENDER		PRINCIPAL

MECH	VP Office	CIVIL	EEE	ECE	CSE	S&H	PD	LIB	EMS	AO	Transport I/C	Hostel NB	Director / Training	Director / Placement	Residential Warden		College NB	Office / File	Class Circulation	Security Office	KBS	Reception
															LH	GH						
*	*	*	*	*	*	*	*						*	*				*	*			

Checked by Principal office I/C		Verified by the sender	

File :

1) Principal Office :
2) Concerned issuing department :

Principal,
Knowledge Institute of Technology
Kanalavam (Po), Salem-637 504

From

S.Surendar,
Assistant Professor,
Department of Mechanical Engineering,
Knowledge Institute of Technology,
Salem.

To

The Principal,
Knowledge Institute of Technology,
Salem. .

Through: Head of the Department, Department of Mechanical Engineering

Respected Sir,

Sub: Components sizing and selection for chilled water type HVAC system –regarding

We have planned to conduct, HVAC Training on **Components sizing and selection for chilled water type HVAC system** from 01.02.2019 for final year mechanical engineering students through IIK (IAPMO-India-KIOT) center in this Academic Year (2018-2019).In this regard, I request your permission to execute the certification course for final year Mechanical Engineering students.

Encl: Name list of shortlisted students.

Thanking You

Place:Salem

Date:21.01.2019

Yours Faithfully

21/01/2019

S.Surendar AP/Mech

(HOD/MECH)

Principal,
Knowledge Institute of Technology,
Kanalavam (Po), Salem-637 504

KNOWLEDGE INSTITUTE OF TECHNOLOGY, SALEM-637504

DEPARTMENT OF MECHANICAL ENGINEERING

CENTER FOR HEATING VENTILATION AND AIR CONDITIONING

BATCH- (2016 - 20) AY: 2018-19

Components Sizing and Selection for Chilled Water Type HVAC- Mark Statement

Year/ Sem: III / VI

Date:28.01.2019

S.No.	Register Number	Student Name	Remarks
1.	611216114009	BASKAR N	
2.	611216114012	BLESSY JEYAPAULINE J	
3.	611216114015	DEEPAK KUMAR V M	
4.	611216114016	DEVAKRISHNA K	
5.	611216114020	DHUKILAN S	
6.	611216114021	DHYANESHKANNA R	
7.	611216114024	DINAKARAN S	
8.	611216114028	DINESHKUMAR T	
9.	611216114030	DIVAKAR P	
10.	611216114038	GOKULNATH S	
11.	611216114040	GOKULRAJ P	
12.	611216114049	HARISH B	
13.	611216114050	HARI VENKATESH Y	
14.	611216114053	JAWAHARBALAJI S	
15.	611216114054	JEEVARAJAN M	
16.	611216114055	JOSHUA JACOB S	
17.	611216114057	KARTHICK M	
18.	611216114058	KARTHICK R	
19.	611216114060	KARTHICK RAJA K	
20.	611216114061	KARTHIKEYAN M	
21.	611216114062	KARTHIKEYAN S	
22.	611216114063	KARTHIKRAJA A	
23.	611216114064	KATHIRVEL C	
24.	611216114069	KISHOR KUMAR K	
25.	611216114075	MANISOWDESVAR J	
26.	611216114092	NAVEENPRAKASH S	
27.	611216114098	PAUL SIMON THEKKANATH	
28.	611216114100	PAVITHRAN K	
29.	611216114101	POOVENTHAN J	
30.	611216114102	PRADEEP S	
31.	611216114105	PRAKASH T	
32.	611216114108	PRASANTH D	
33.	611216114111	PRAVEEN M E	
34.	611216114128	SAIGIRISH O E	
35.	611216114129	SAKTHI M	
36.	611216114172	VINOTH KUMAR K	
37.	611216114308	DINESH KUMAR P	
38.	611216114321	HARI SURYA S	
39.	611216114331	NAGAPPAN N	
40.	611216114346	SELLADURAI R	
41.	611216114351	SURENTHAR R	
42.	611216114359	VISWAJITH S	
43.	611216114009	BASKAR N	

FACULTY I/C

HOD/MECH

PRINCIPAL

Principal,
Knowledge Institute of Technology
Kaalavam (Po), Salem-637 504

KNOWLEDGE INSTITUTE OF TECHNOLOGY Department of Mechanical Engineering A.Y: 2018-19 Course Plan (2020 Batch) Date: 31.08.2018				
Name of the COE:		IAPMO-India – KIOT, Centre of Excellence		
Name of the Course:		HVAC Design and Project Installation Engineer	Semester	05 & 06
Name of the Module	**Topics to be covered**	**Faculty Name**	**Number of Hours**	**Faculty Signature**
Design of Practical HVAC System	Fundamental and scope of HVAC, Mode of heat transfer, Standards, Refrigeration cycle, Component of A/C, Refrigerants and types, Study of AC system, Study of Psychrometric, Classification of Air-Conditioning System & Sub systems in AC.	Mr.S.Surendar & Mr.S.M.Gowtham	30	
Components sizing and selection for chilled water type HVAC system	Orientation of Building, To Read Latitude & Location of building, Difference for wall, glass, Roof and Partition, Cooling and Heat Load Calculation, Calculation of sensible Heat Factor ADP and Dehumidified CFM, Cooling Load Calculation, Chilled water system & Equipment Selection	Mr.S.Rajesh & Mr.J.Ramesh	30	
		Total No.of Hours	**60**	

Detailed Execution Plan

Name of the Course Module: 1. Design of Practical HVAC System

Duration: 30 hours

Module No.	Name of the Module	Teaching Hours	Practical Hours	Self-Study Hours	Course Plan (Day wise)
1.1	Fundamental and scope of HVAC	2	-	-	Day 1
1.2	Mode of heat transfer	2	-	-	Day 2
1.3	Mode of heat transfer	1	-	1	Day 3
1.4	Refrigeration cycle	2	-	-	Day 4
1.5	Refrigeration cycle	1	-	1	Day 5
1.6	Component of A/C	2	-	-	Day 6
1.7	Refrigerants and types	2	-	-	Day 7

Principal,
Knowledge Institute of Technology
Kakapalayam (Po), Salem-637 504

1.8	Study of AC system	2	-	-	Day 8
1.9	Study of Psychrometric	2	-	-	Day 9
1.10	Study of Psychrometric	2	-	-	Day 10
1.11	Study of Psychrometric	1	-	1	Day 11
1.12	Classification of Air-Conditioning System	2	-	-	Day 12
1.13	Classification of Air-Conditioning System	2	-	-	Day 13
1.14	Classification of Air-Conditioning System	2	-	-	Day 14
1.15	Sub systems in AC	2	-	-	Day 15

Detailed Execution Plan

Name of the Course Module: 2. Components sizing and selection for chilled water type HVAC system

Duration: 30 hours

Module No.	Name of the Module	Teaching Hours	Practical Hours	Self-Study Hours	Course Plan (Day wise)
2.1	Air terminal selection	2	-	-	Day 1
2.2	Air terminal selection	1	-	1	Day 2
2.3	Cold storage selection	2	-	-	Day 3
2.4	Cold storage selection	1	-	1	Day 4
2.5	Selection of Materials of Ducts	2	-	-	Day 5
2.6	Selection of Materials of Ducts	1	-	1	Day 6
2.7	Primary and secondary pump selections	2	-	-	Day 7
2.8	Selection of cooling tower	2	-	-	Day 8
2.9	Selection of cooling tower	1	-	1	Day 9
2.10	Selection of Chillers	2	-	-	Day 10
2.11	Selection of Chillers	1	-	1	Day 11
2.12	AHU and FCU classification and selection	2	-	-	Day 12
2.13	Selection of Fan/Blower RPM	2	-	-	Day 13
2.14	Chilled water system & Equipment Selection	2	-	-	Day 14
2.15	Selection of Motor HP	2	-	-	Day 15

FACULTY I/C HOD/MECH PRINCIPAL

Principal,
Knowledge Institute of Technology
Kakapalayam (Po), Salem-637 504

KNOW[illegible]DGE INSTITUTE OF TECHNOLOGY, SAL[illegible]1-637504

DEPARTMENT OF MECHANICAL ENGINEERING

CENTER FOR HEATING VENTILATION AND AIR CONDITIONING

BATCH-2016-20 / **Components sizing and selection for chilled water type HVAC system** / Academic Year/ SEM: 2018-19 / ODD Date: 21.02.201[illegible]

S.No	Reg.No	Name of the student	Year / Sem	01. 02. 2019	04. 02. 2019	05. 02. 2019	06. 02. 2019	07. 02. 2019	08. 02. 2019	11. 02. 2019	12. 02. 2019	13. 02. 2019	14. 02. 2019	15. 02. 2019	18. 02. 2019	19. 02. 2019	20. 02. 2019	21. 02. 2019
1.	611216114009	BASKAR N	III / VI															
2.	611216114012	BLESSY JEYAPAULINE J	III / VI															
3.	611216114015	DEEPAK KUMAR V M	III / VI															
4.	611216114016	DEVAKRISHNA K	III / VI															
5.	611216114020	DHUKILAN S	III / VI															
6.	611216114021	DHYANESHKANNA R	III / VI															
7.	611216114024	DINAKARAN S	III / VI															
8.	611216114028	DINESHKUMAR T	III / VI															
9.	611216114030	DIVAKAR P	III / VI															
10.	611216114038	GOKULNATH S	III / VI															
11.	611216114040	GOKULRAJ P	III / VI															
12.	611216114049	HARISH B	III / VI															
13.	611216114050	HARI VENKATESH Y	III / VI															
14.	611216114053	JAWAHARBALAJI S	III / VI															
15.	611216114054	JEEVARAJAN M	III / VI															
16.	611216114055	JOSHUA JACOB S	III / VI															
17.	611216114057	KARTHICK M	III / VI															
18.	611216114058	KARTHICK R	III / VI															
19.	611216114060	KARTHICK RAJA K	III / VI															
20.	611216114061	KARTHIKEYAN M	III / VI															
21.	611216114062	KARTHIKEYAN S	III / VI															

Principal,
Knowledge Institute of Technology
Kakapalayam (Po), Salem-637 504

22.	611216114063	KARTHIKRAJA A	III / VI																
23.	611216114064	KATHIRVEL C	III / VI																
24.	611216114069	KISHOR KUMAR K	III / VI																
25.	611216114075	MANISOWDESVAR J	III / VI																
26.	611216114092	NAVEENPRAKASH S	III / VI																
27.	611216114098	PAUL SIMON THEKKANATH	III / VI																
28.	611216114100	PAVITHRAN K	III / VI																
29.	611216114101	POOVENTHAN J	III / VI																
30.	611216114102	PRADEEP S	III / VI																
31.	611216114105	PRAKASH T	III / VI																
32.	611216114108	PRASANTH D	III / VI																
33.	611216114111	PRAVEEN M E	III / VI																
34.	611216114128	SAIGIRISH O E	III / VI																
35.	611216114129	SAKTHI M	III / VI																
36.	611216114172	VINOTH KUMAR K	III / VI																
37.	611216114308	DINESH KUMAR P	III / VI																
38.	611216114321	HARI SURYA S	III / VI																
39.	611216114331	NAGAPPAN N	III / VI																
40.	611216114346	SELLADURAI R	III / VI																
41.	611216114351	SURENTHAR R	III / VI																
42.	611216114359	VISWAJITH S	III / VI																
			No. of Students Present	42	42	41	41	42	42	41	41	41	41	42	41	42	41	41
			No. of Students Absent	NIL	NIL	01	01	NIL	NIL	01	01	01	01	NIL	01	NIL	01	01
			Faculty Signature																

FACULTY I/C

HoD/MECH

PRINCIPAL

Principal,
Knowledge Institute of Technology
Kakapalayam (Po), Salem-637 504

KNOWLEDGE INSTITUTE OF TECHNOLOGY					
DEPARTMENT OF MECHANICAL ENGINEERING					
IAPMO-India – KIOT, Centre of Excellence					
Subject Name	Components sizing and selection for chilled water type HVAC system				
Name of the Student	Dhyaneshkanna . R				
Register No	611216114021				
Date	25/02/2019	Duration	60 Minutes	Max.Marks	50
Faculty Name	Marks Awarded				
S. SARENDAR	49		FOUR ZERO		
Faculty Signature					

ANSWER ALL THE QUESTIONS-(50X01=50)

1. Which of the following refrigerant is highly toxic and flammable?
(A) Ammonia (B) Carbon dioxide (C) Sulphur dioxide (D) R-12
2. The dehumidification process, on the psychrometric chart, is shown by
(A) Horizontal line (B) Vertical line (C) Inclined line (D) Curved line
3. The wet bulb temperature at 100% relative humidity is _____ dry bulb temperature.
(A) Same as (B) Lower than (C) Higher than (D) None of these
4. The human body feels comfortable when the heat stored in the body is
(A) Positive (B) Negative (C) Zero (D) None of these
5. The heat rejection factor (HRF) is given by
(A) 1 + C.O.P (B) 1 - C.O.P. (C) 1 + (1/C.O.P) (D) 1 - (1/C.O.P)
6. In order to collect liquid refrigerant and to prevent it from going to a _____, a device known as accumulator is used at the suction of compressor.
(A) Compressor (B) Condenser (C) Expansion valve (D) Evaporator
7. The vertical and uniformly spaced lines on a psychrometric chart indicates
(A) Dry bulb temperature (B) Wet bulb temperature (C) Dew point temperature
(D) Specific humidity
8. The undesirable property of a refrigerant is
(A) Non-toxic (B) Non-flammable (C) Non-explosive (D) High boiling point
9. The process, generally used in summer air conditioning to cool and dehumidify the air, is called
(A) Humidification (B) Dehumidification (C) Heating and humidification
(D) Cooling and dehumidification
10. The leakage in a refrigeration system using ammonia is detected by
(A) Halide torch (B) Sulphur sticks (C) Soap and water (D) All of these
11. The lowest temperature during the cycle in a vapour compression system occurs after
(A) Compression (B) Expansion (C) Condensation (D) Evaporation
12. In a domestic refrigerator, a capillary tube controls the flow of refrigerant from the
(A) Expansion valve to the evaporator (B) Evaporator to the thermostat
(C) Condenser to the expansion valve (D) Condenser to the evaporator
13. The refrigerant used in small tonnage commercial machines (hermetically sealed units) is
(A) Ammonia (B) Carbon dioxide (C) Sulphur dioxide (D) R-12
14. When the air is passed through an insulated chamber having sprays of water maintained at a temperature higher than the dew point temperature of entering air but lower than its dry bulb temperature, then the air is said to be
(A) Cooled and humidified (B) Cooled and dehumidified
(C) Heated and humidified (D) Heated and dehumidified
15. A refrigerant compressor is used to
(A) Raise the pressure of the refrigerant (B) Raise the temperature of the refrigerant
(C) Circulate the refrigerant through the refrigerating system (D) All of the above
16. In aqua ammonia absorption refrigeration system, incomplete rectification leads to accumulation of water in
(A) Condenser (B) Evaporator (C) Absorber (D) None of these
17. Most air cooled condensers are designed to operate with a temperature difference of
(A) 5°C (B) 8°C (C) 14°C (D) 22°C

PM

Principal,
Knowledge Institute of Technology
Kakapalayam (Po), Salem-637 50

18. In a reversed Brayton cycle, the heat is absorbed by the air during
(A) Isentropic compression process (B) Constant pressure cooling process
(C) Isentropic expansion process (D) Constant pressure expansion process
19. Wet bulb temperature is the temperature of air recorded by a thermometer, when
(A) It is not affected by the moisture present in the air
(B) Its bulb is surrounded by a wet cloth exposed to the air
(C) The moisture present in it begins to condense
(D) None of the above
20. The difference between dry bulb temperature and dew point temperature, is called
(A) Dry bulb depression (B) Wet bulb depression
(C) Dew point depression (D) Degree of saturation
21. In mechanical refrigeration system, the refrigerant has the maximum temperature
(A) In evaporator (B) Before expansion valve
(C) Between compressor and condenser (D) Between condenser and evaporator
22. The central air conditioning system has _____ overall efficiency as compared to individual systems.
(A) Same (B) Lower (C) Higher (D) None of these
23. Moisture should be removed from refrigerants to avoid
(A) Freezing at the expansion valve (B) Restriction to refrigerant flow
(C) Corrosion of steel plates (D) All of these
24. The specific humidity during humidification process
(A) Remains constant (B) Increases (C) Decreases (D) None of these
25. During a refrigeration cycle, heat is rejected by the refrigerant in a
(A) Compressor (B) Condenser (C) Evaporator (D) Expansion valve
26. In a vapour compression system, the condition of refrigerant is dry saturated vapour
(A) Before entering the compressor (B) After leaving the compressor
(C) Before entering the condenser (D) After leaving the condenser
27. During sensible cooling of air, specific humidity
(A) Remains constant (B) Increases (C) Decreases (D) None of these
28. In a psychrometric chart, specific humidity (moisture content) lines are
(A) Vertical and uniformly spaced (B) Horizontal and uniformly spaced
(C) Horizontal and non-uniformly spaced (D) Curved lines
29. The horizontal and non-uniformly spaced lines on a psychrometric chart indicates
(A) Dry bulb temperature (B) Wet bulb temperature
(C) Dew point temperature (D) Specific humidity
30. In a vapour compression refrigeration system, a throttle valve is used in place of an expander because
(A) It considerably reduces mass of the system (B) It improves the C.O.P., as the condenser is small
(C) The positive work in isentropic expansion of liquid is very small (D) It leads to significant cost reduction
31. The ratio of the actual mass of water vapour in a unit mass of dry air to the mass of water vapour in the same mass of dry air when it is saturated at the same temperature and pressure, is called
(A) Humidity ratio (B) Relative humidity (C) Absolute humidity (D) Degree of saturation
32. During dehumidification process, _____ remains constant.
(A) Wet bulb temperature (B) Relative humidity (C) Dry bulb temperature (D) Specific humidity
33. Pressure of water vapour is given by
(A) 0.622 Pv/ (Pb - Pv) (B) $\mu/[1 - (1 - \mu)(Ps/Pb)]$ (C) [Pv (Pb - Pd)]/ [Pd (Pb - Pv)] (D) None of these
34. R-12 is generally preferred over R-22 in deep freezers since
(A) It has low operating pressures (B) It gives higher coefficient of performance
(C) It is miscible with oil over large range of temperatures (D) All of the above
35. In a spray washing system, if the temperature of water is higher than the dry bulb temperature of entering air, then the air is
(A) Heated and dehumidified (B) Heated and humidified
(C) Cooled and humidified (D) Cooled and dehumidified
36. A valve which maintains a constant degree of superheat at the end of the evaporator coil, is called
(A) Automatic expansion valve (B) High side float valve
(C) Thermostatic expansion valve (D) Low side float valve

Principal,
Knowledge Institute of Technology
Kakapalayam (Po), Salem-637 504

37. An infinite parallel planes with emissivities e_1 and e_2, the interchange factor for radiation from surface 1 to surface 2 is given by

(A) $(e_1 + e_2)/ e_1 + e_2 - e_1e_2$ (B) $1/e_1 + 1/e_2$ (C) $e_1 + e_2$ (D) e_1e_2

38. The emissivity of a polished silver body is _____ as compared to black body.

(A) Same (B) Low (C) Very low (D) High

39. Air refrigerator works on

(A) Reversed Carnot cycle (B) Bell Coleman cycle (C) Both (A) and (B) (D) None of these

40. The relative coefficient of performance is equal to

(A) (Theoretical C.O.P.)/ (Actual C.O.P.) (B) (Actual C.O.P.) /(Theoretical C.O.P.)

(C) (Actual C.O.P.) × (Theoretical C.O.P.) (D) None of these

41. In case of sensible cooling of air, the coil efficiency is given by

(A) B.P.F. – 1 (B) 1 - B.P.F. (C) 1/ B.P.F. (D) 1 + B.P.F.

42. For large tonnage (more than 200 TR) air-conditioning applications, the compressor recommended is

(A) Reciprocating (B) Rotating (C) Centrifugal (D) Screw

43. The wet bulb temperature during sensible cooling of air

(A) Remains constant (B) Increases (C) Decreases (D) None of these

44. A condenser of refrigeration system rejects heat at the rate of 120 kW, while its compressor consumes a power of 30 kW. The coefficient of performance of the system will be

(A) ¼ (B) 1/3 (C) 3 (D) 4

45. A refrigerant with the highest critical pressure is

(A) R-11 (B) R-12 (C) R-22 (D) Ammonia

46. The unit of thermal diffusivity is

(A) m/hK (B) m/h (C) m^2/h (D) m^2/hK

47. The comfort conditions in air conditioning are at (where DBT = Dry bulb temperature, and RH = Relative humidity)

(A) 25°C DBT and 100% RH (B) 20°C DBT and 80% RH

(C) 22°C DBT and 60% RH (D) 25°C DBT and 40% RH

48. The pressure at the outlet of a refrigerant compressor is called

(A) Suction pressure (B) Discharge pressure (C) Critical pressure (D) Back pressure

49. The bypass factor, in case of sensible cooling of air, is given by (where td_1 = Dry bulb temperature of air entering the cooling coil, td_2 = Dry bulb temperature of air leaving the cooling coil, and td_3 = Dry bulb temperature of the cooling coil)

(A) $(td_1 - td_3)/(td_2 - td_3)$ (B) $(td_2 - td_3)/(td_1 - td_3)$ (C) $(td_3 - td_1)/(td_2 - td_3)$ (D) $(td_3 - td_2)/(td_1 - td_3)$

50. The operating temperature of a cold storage is 2°C. The heat leakage from the surrounding is 30 kW for the ambient temperature of 40°C. The actual C.O.P. of refrigeration plant used is one fourth that of ideal plant working between the same temperatures. The power required to drive the plant is

(A) 1.86 kW (B) 3.72 kW (C) 7.44 kW (D) 18.6 kW

FACULTY I/C

HOD/MECH

Principal,
Knowledge Institute of Technology
Kakapalayam (Po), Salem-637 504

KNOWLEDGE INSTITUTE OF TECHNOLOGY					
DEPARTMENT OF MECHANICAL ENGINEERING					
IAPMO-India – KIOT, Centre of Excellence					
Subject Name	Components sizing and selection for chilled water type HVAC system				
Name of the Student	Karthick.M ECE II				
Register No	811216114057				
Date	25/02/2019	Duration	60 Minutes	Max.Marks	50
Faculty Name	Marks Awarded				
Faculty Signature	32		THREE TWO		

ANSWER ALL THE QUESTIONS-(50X01=50)

1. Which of the following refrigerant is highly toxic and flammable?
(A) Ammonia (B) Carbon dioxide (C) Sulphur dioxide (D) R-12
2. The dehumidification process, on the psychrometric chart, is shown by
(A) Horizontal line (B) Vertical line (C) Inclined line (D) Curved line
3. The wet bulb temperature at 100% relative humidity is _____ dry bulb temperature.
(A) Same as (B) Lower than (C) Higher than (D) None of these
4. The human body feels comfortable when the heat stored in the body is
(A) Positive (B) Negative (C) Zero (D) None of these
5. The heat rejection factor (HRF) is given by
(A) 1 + C.O.P (B) 1 - C.O.P. (C) 1/+ (1/C.O.P) (D) 1 - (1/C.O.P)
6. In order to collect liquid refrigerant and to prevent it from going to a _____, a device known as accumulator is used at the suction of compressor.
(A) Compressor (B) Condenser (C) Expansion valve (D) Evaporator
7. The vertical and uniformly spaced lines on a psychrometric chart indicates
(A) Dry bulb temperature (B) Wet bulb temperature (C) Dew point temperature
(D) Specific humidity
8. The undesirable property of a refrigerant is
(A) Non-toxic (B) Non-flammable (C) Non-explosive (D) High boiling point
9. The process, generally used in summer air conditioning to cool and dehumidify the air, is called
(A) Humidification (B) Dehumidification (C) Heating and humidification
(D) Cooling and dehumidification
10. The leakage in a refrigeration system using ammonia is detected by
(A) Halide torch (B) Sulphur sticks (C) Soap and water (D) All of these
11. The lowest temperature during the cycle in a vapour compression system occurs after
(A) Compression (B) Expansion (C) Condensation (D) Evaporation
12. In a domestic refrigerator, a capillary tube controls the flow of refrigerant from the
(A) Expansion valve to the evaporator (B) Evaporator to the thermostat
(C) Condenser to the expansion valve (D) Condenser to the evaporator
13. The refrigerant used in small tonnage commercial machines (hermetically sealed units) is
(A) Ammonia (B) Carbon dioxide (C) Sulphur dioxide (D) R-12
14. When the air is passed through an insulated chamber having sprays of water maintained at a temperature higher than the dew point temperature of entering air but lower than its dry bulb temperature, then the air is said to be
(A) Cooled and humidified (B) Cooled and dehumidified
(C) Heated and humidified (D) Heated and dehumidified
15. A refrigerant compressor is used to
(A) Raise the pressure of the refrigerant (B) Raise the temperature of the refrigerant
(C) Circulate the refrigerant through the refrigerating system (D) All of the above
16. In aqua ammonia absorption refrigeration system, incomplete rectification leads to accumulation of water in
(A) Condenser (B) Evaporator (C) Absorber (D) None of these
17. Most air cooled condensers are designed to operate with a temperature difference of
(A) 5°C (B) 8°C (C) 14°C (D) 22°C

Principal,
Knowledge Institute of Technology
Kakkapalayam (Po), Salem-637 504

18. In a reversed Brayton cycle, the heat is absorbed by the air during
(A) Isentropic compression process (B) Constant pressure cooling process
(C) Isentropic expansion process (D) Constant pressure expansion process
19. Wet bulb temperature is the temperature of air recorded by a thermometer, when
(A) It is not affected by the moisture present in the air
(B) Its bulb is surrounded by a wet cloth exposed to the air
(C) The moisture present in it begins to condense
(D) None of the above
20. The difference between dry bulb temperature and dew point temperature, is called
(A) Dry bulb depression (B) Wet bulb depression
(C) Dew point depression (D) Degree of saturation
21. In mechanical refrigeration system, the refrigerant has the maximum temperature
(A) In evaporator (B) Before expansion valve
(C) Between compressor and condenser (D) Between condenser and evaporator
22. The central air conditioning system has _____ overall efficiency as compared to individual systems.
(A) Same (B) Lower (C) Higher (D) None of these
23. Moisture should be removed from refrigerants to avoid
(A) Freezing at the expansion valve (B) Restriction to refrigerant flow
(C) Corrosion of steel plates (D) All of these
24. The specific humidity during humidification process
(A) Remains constant (B) Increases (C) Decreases (D) None of these
25. During a refrigeration cycle, heat is rejected by the refrigerant in a
(A) Compressor (B) Condenser (C) Evaporator (D) Expansion valve
26. In a vapour compression system, the condition of refrigerant is dry saturated vapour
(A) Before entering the compressor (B) After leaving the compressor
(C) Before entering the condenser (D) After leaving the condenser
27. During sensible cooling of air, specific humidity
(A) Remains constant (B) Increases (C) Decreases (D) None of these
28. In a psychrometric chart, specific humidity (moisture content) lines are
(A) Vertical and uniformly spaced (B) Horizontal and uniformly spaced
(C) Horizontal and non-uniformly spaced (D) Curved lines
29. The horizontal and non-uniformly spaced lines on a psychrometric chart indicates
(A) Dry bulb temperature (B) Wet bulb temperature
(C) Dew point temperature (D) Specific humidity
30. In a vapour compression refrigeration system, a throttle valve is used in place of an expander because
(A) It considerably reduces mass of the system (B) It improves the C.O.P., as the condenser is small
(C) The positive work in isentropic expansion of liquid is very small (D) It leads to significant cost reduction
31. The ratio of the actual mass of water vapour in a unit mass of dry air to the mass of water vapour in the same mass of dry air when it is saturated at the same temperature and pressure, is called
(A) Humidity ratio (B) Relative humidity (C) Absolute humidity (D) Degree of saturation
32. During dehumidification process, _____ remains constant.
(A) Wet bulb temperature (B) Relative humidity (C) Dry bulb temperature (D) Specific humidity
33. Pressure of water vapour is given by
(A) 0.622 Pv/ (Pb - Pv) (B) $\mu/[1 - (1 - \mu)(Ps/Pb)]$ (C) [Pv (Pb - Pd)]/ [Pd (Pb - Pv)] (D) None of these
34. R-12 is generally preferred over R-22 in deep freezers since
(A) It has low operating pressures (B) It gives higher coefficient of performance
(C) It is miscible with oil over large range of temperatures (D) All of the above
35. In a spray washing system, if the temperature of water is higher than the dry bulb temperature of entering air, then the air is
(A) Heated and dehumidified (B) Heated and humidified
(C) Cooled and humidified (D) Cooled and dehumidified
36. A valve which maintains a constant degree of superheat at the end of the evaporator coil, is called
(A) Automatic expansion valve (B) High side float valve
(C) Thermostatic expansion valve (D) Low side float valve

Principal,
Knowledge Institute of Technology
Kakapalayam (Po), Salem-637 504

37. An infinite parallel planes with emissivities e_1 and e_2, the interchange factor for radiation from surface 1 to surface 2 is given by

(A) $(e_1 + e_2)/ e_1 + e_2 - e_1e_2$ (B) $1/e_1 + 1/e_2$ (C) $e_1 + e_2$ (D) e_1e_2

38. The emissivity of a polished silver body is _____ as compared to black body.

(A) Same (B) Low (C) Very low (D) High

39. Air refrigerator works on

(A) Reversed Carnot cycle (B) Bell Coleman cycle (C) Both (A) and (B) (D) None of these

40. The relative coefficient of performance is equal to

(A) (Theoretical C.O.P.)/ (Actual C.O.P.) (B) (Actual C.O.P.) /(Theoretical C.O.P.)

(C) (Actual C.O.P.) × (Theoretical C.O.P.) (D) None of these

41. In case of sensible cooling of air, the coil efficiency is given by

(A) B.P.F. – 1 (B) 1 - B.P.F. (C) 1/ B.P.F. (D) 1 + B.P.F.

42. For large tonnage (more than 200 TR) air-conditioning applications, the compressor recommended is

(A) Reciprocating (B) Rotating (C) Centrifugal (D) Screw

43. The wet bulb temperature during sensible cooling of air

(A) Remains constant (B) Increases (C) Decreases (D) None of these

44. A condenser of refrigeration system rejects heat at the rate of 120 kW, while its compressor consumes a power of 30 kW. The coefficient of performance of the system will be

(A) ¼ (B) 1/3 (C) 3 (D) 4

45. A refrigerant with the highest critical pressure is

(A) R-11 (B) R-12 (C) R-22 (D) Ammonia

46. The unit of thermal diffusivity is

(A) m/hK (B) m/h (C) m^2/h (D) m^2/hK

47. The comfort conditions in air conditioning are at (where DBT = Dry bulb temperature, and RH = Relative humidity)

(A) 25°C DBT and 100% RH (B) 20°C DBT and 80% RH

(C) 22°C DBT and 60% RH (D) 25°C DBT and 40% RH

48. The pressure at the outlet of a refrigerant compressor is called

(A) Suction pressure (B) Discharge pressure (C) Critical pressure (D) Back pressure

49. The bypass factor, in case of sensible cooling of air, is given by (where td_1 = Dry bulb temperature of air entering the cooling coil, td_2 = Dry bulb temperature of air leaving the cooling coil, and td_3 = Dry bulb temperature of the cooling coil)

(A) $(td_1 - td_3)/(td_2 - td_3)$ (B) $(td_2 - td_3)/(td_1 - td_3)$ (C) $(td_3 - td_1)/(td_2 - td_3)$ (D) $(td_3 - td_2)/(td_1 - td_3)$

50. The operating temperature of a cold storage is 2°C. The heat leakage from the surrounding is 30 kW for the ambient temperature of 40°C. The actual C.O.P. of refrigeration plant used is one fourth that of ideal plant working between the same temperatures. The power required to drive the plant is

(A) 1.86 kW (B) 3.72 kW (C) 7.44 kW (D) 18.6 kW

FACULTY I/C

HOD/MECH

Principal,
Knowledge Institute of Technology
Kakapalayam (Po), Salem-637 504

KNOWLEDGE INSTITUTE OF TECHNOLOGY					
DEPARTMENT OF MECHANICAL ENGINEERING					
IAPMO-India – KIOT, Centre of Excellence					
Subject Name	Components sizing and selection for chilled water type HVAC system				
Name of the Student	Karthickraja. K				
Register No	611216114060				
Date	25/02/2019	Duration	60 Minutes	Max.Marks	50
Faculty Name	Marks Awarded				
S. SREMAR	32	THREE TWO			
Faculty Signature					

ANSWER ALL THE QUESTIONS-(50X01=50)

1. Which of the following refrigerant is highly toxic and flammable?
(A) Ammonia (B) Carbon dioxide (C) Sulphur dioxide (D) R-12
2. The dehumidification process, on the psychrometric chart, is shown by
(A) Horizontal line (B) Vertical line (C) Inclined line (D) Curved line
3. The wet bulb temperature at 100% relative humidity is _____ dry bulb temperature.
(A) Same as (B) Lower than (C) Higher than (D) None of these
4. The human body feels comfortable when the heat stored in the body is
(A) Positive (B) Negative (C) Zero (D) None of these
5. The heat rejection factor (HRF) is given by
(A) 1 + C.O.P (B) 1 - C.O.P. (C) 1 + (1/C.O.P) (D) 1 - (1/C.O.P)
6. In order to collect liquid refrigerant and to prevent it from going to a _____, a device known as accumulator is used at the suction of compressor.
(A) Compressor (B) Condenser (C) Expansion valve (D) Evaporator
7. The vertical and uniformly spaced lines on a psychrometric chart indicates
(A) Dry bulb temperature (B) Wet bulb temperature (C) Dew point temperature
(D) Specific humidity
8. The undesirable property of a refrigerant is
(A) Non-toxic (B) Non-flammable (C) Non-explosive (D) High boiling point
9. The process, generally used in summer air conditioning to cool and dehumidify the air, is called
(A) Humidification (B) Dehumidification (C) Heating and humidification
(D) Cooling and dehumidification
10. The leakage in a refrigeration system using ammonia is detected by
(A) Halide torch (B) Sulphur sticks (C) Soap and water (D) All of these
11. The lowest temperature during the cycle in a vapour compression system occurs after
(A) Compression (B) Expansion (C) Condensation (D) Evaporation
12. In a domestic refrigerator, a capillary tube controls the flow of refrigerant from the
(A) Expansion valve to the evaporator (B) Evaporator to the thermostat
(C) Condenser to the expansion valve (D) Condenser to the evaporator
13. The refrigerant used in small tonnage commercial machines (hermetically sealed units) is
(A) Ammonia (B) Carbon dioxide (C) Sulphur dioxide (D) R-12
14. When the air is passed through an insulated chamber having sprays of water maintained at a temperature higher than the dew point temperature of entering air but lower than its dry bulb temperature, then the air is said to be
(A) Cooled and humidified (B) Cooled and dehumidified
(C) Heated and humidified (D) Heated and dehumidified
15. A refrigerant compressor is used to
(A) Raise the pressure of the refrigerant (B) Raise the temperature of the refrigerant
(C) Circulate the refrigerant through the refrigerating system (D) All of the above
16. In aqua ammonia absorption refrigeration system, incomplete rectification leads to accumulation of water in
(A) Condenser (B) Evaporator (C) Absorber (D) None of these
17. Most air cooled condensers are designed to operate with a temperature difference of
(A) 5°C (B) 8°C (C) 14°C (D) 22°C

Principal,
Knowledge Institute of Technology
Kavam (Po), Salem-637 504

18. In a reversed Brayton cycle, the heat is absorbed by the air during
(A) Isentropic compression process (B) Constant pressure cooling process
(C) Isentropic expansion process (D) Constant pressure expansion process
19. Wet bulb temperature is the temperature of air recorded by a thermometer, when
(A) It is not affected by the moisture present in the air
(B) Its bulb is surrounded by a wet cloth exposed to the air
(C) The moisture present in it begins to condense
(D) None of the above
20. The difference between dry bulb temperature and dew point temperature, is called
(A) Dry bulb depression (B) Wet bulb depression
(C) Dew point depression (D) Degree of saturation
21. In mechanical refrigeration system, the refrigerant has the maximum temperature
(A) In evaporator (B) Before expansion valve
(C) Between compressor and condenser (D) Between condenser and evaporator
22. The central air conditioning system has _____ overall efficiency as compared to individual systems.
(A) Same (B) Lower (C) Higher (D) None of these
23. Moisture should be removed from refrigerants to avoid
(A) Freezing at the expansion valve (B) Restriction to refrigerant flow
(C) Corrosion of steel plates (D) All of these
24. The specific humidity during humidification process
(A) Remains constant (B) Increases (C) Decreases (D) None of these
25. During a refrigeration cycle, heat is rejected by the refrigerant in a
(A) Compressor (B) Condenser (C) Evaporator (D) Expansion valve
26. In a vapour compression system, the condition of refrigerant is dry saturated vapour
(A) Before entering the compressor (B) After leaving the compressor
(C) Before entering the condenser (D) After leaving the condenser
27. During sensible cooling of air, specific humidity
(A) Remains constant (B) Increases (C) Decreases (D) None of these
28. In a psychrometric chart, specific humidity (moisture content) lines are
(A) Vertical and uniformly spaced (B) Horizontal and uniformly spaced
(C) Horizontal and non-uniformly spaced (D) Curved lines
29. The horizontal and non-uniformly spaced lines on a psychrometric chart indicates
(A) Dry bulb temperature (B) Wet bulb temperature
(C) Dew point temperature (D) Specific humidity
30. In a vapour compression refrigeration system, a throttle valve is used in place of an expander because
(A) It considerably reduces mass of the system (B) It improves the C.O.P., as the condenser is small
(C) The positive work in isentropic expansion of liquid is very small (D) It leads to significant cost reduction
31. The ratio of the actual mass of water vapour in a unit mass of dry air to the mass of water vapour in the same mass of dry air when it is saturated at the same temperature and pressure, is called
(A) Humidity ratio (B) Relative humidity (C) Absolute humidity (D) Degree of saturation
32. During dehumidification process, _____ remains constant.
(A) Wet bulb temperature (B) Relative humidity (C) Dry bulb temperature (D) Specific humidity
33. Pressure of water vapour is given by
(A) 0.622 Pv/ (Pb - Pv) (B) $\mu/[1 - (1 - \mu)(Ps/Pb)]$ (C) $[Pv (Pb - Pd)]/ [Pd (Pb - Pv)]$ (D) None of these
34. R-12 is generally preferred over R-22 in deep freezers since
(A) It has low operating pressures (B) It gives higher coefficient of performance
(C) It is miscible with oil over large range of temperatures (D) All of the above
35. In a spray washing system, if the temperature of water is higher than the dry bulb temperature of entering air, then the air is
(A) Heated and dehumidified (B) Heated and humidified
(C) Cooled and humidified (D) Cooled and dehumidified
36. A valve which maintains a constant degree of superheat at the end of the evaporator coil, is called
(A) Automatic expansion valve (B) High side float valve
(C) Thermostatic expansion valve (D) Low side float valve

Principal,
Knowledge Institute of Technology
Kakapalayam (Po), Salem-637 50

37. An infinite parallel planes with emissivities e_1 and e_2, the interchange factor for radiation from surface 1 to surface 2 is given by

(A) $(e_1 + e_2)/ e_1 + e_2 - e_1e_2$ (B) $1/e_1 + 1/e_2$ (C) $e_1 + e_2$ (D) e_1e_2

38. The emissivity of a polished silver body is _____ as compared to black body.

(A) Same (B) Low (C) Very low (D) High

39. Air refrigerator works on

(A) Reversed Carnot cycle (B) Bell Coleman cycle (C) Both (A) and (B) (D) None of these

40. The relative coefficient of performance is equal to

(A) (Theoretical C.O.P.)/ (Actual C.O.P.) (B) (Actual C.O.P.) /(Theoretical C.O.P.)

(C) (Actual C.O.P.) × (Theoretical C.O.P.) (D) None of these

41. In case of sensible cooling of air, the coil efficiency is given by

(A) B.P.F. – 1 (B) 1 - B.P.F. (C) 1/ B.P.F. (D) 1 + B.P.F.

42. For large tonnage (more than 200 TR) air-conditioning applications, the compressor recommended is

(A) Reciprocating (B) Rotating (C) Centrifugal (D) Screw

43. The wet bulb temperature during sensible cooling of air

(A) Remains constant (B) Increases (C) Decreases (D) None of these

44. A condenser of refrigeration system rejects heat at the rate of 120 kW, while its compressor consumes a power of 30 kW. The coefficient of performance of the system will be

(A) ¼ (B) 1/3 (C) 3 (D) 4

45. A refrigerant with the highest critical pressure is

(A) R-11 (B) R-12 (C) R-22 (D) Ammonia

46. The unit of thermal diffusivity is

(A) m/hK (B) m/h (C) m^2/h (D) m^2/hK

47. The comfort conditions in air conditioning are at (where DBT = Dry bulb temperature, and RH = Relative humidity)

(A) 25°C DBT and 100% RH (B) 20°C DBT and 80% RH

(C) 22°C DBT and 60% RH (D) 25°C DBT and 40% RH

48. The pressure at the outlet of a refrigerant compressor is called

(A) Suction pressure (B) Discharge pressure (C) Critical pressure (D) Back pressure

49. The bypass factor, in case of sensible cooling of air, is given by (where td_1 = Dry bulb temperature of air entering the cooling coil, td_2 = Dry bulb temperature of air leaving the cooling coil, and td_3 = Dry bulb temperature of the cooling coil)

(A) $(td_1 - td_3)/(td_2 - td_3)$ (B) $(td_2 - td_3)/(td_1 - td_3)$ (C) $(td_3 - td_1)/(td_2 - td_3)$ (D) $(td_3 - td_2)/(td_1 - td_3)$

50. The operating temperature of a cold storage is 2°C. The heat leakage from the surrounding is 30 kW for the ambient temperature of 40°C. The actual C.O.P. of refrigeration plant used is one fourth that of ideal plant working between the same temperatures. The power required to drive the plant is

(A) 1.86 kW (B) 3.72 kW (C) 7.44 kW (D) 18.6 kW

FACULTY I/C **HOD/MECH**

Principal,
Knowledge Institute of Technology
...lavam (Po), Salem-637 504

KNOWLEDGE INSTITUTE OF TECHNOLOGY					
DEPARTMENT OF MECHANICAL ENGINEERING					
IAPMO-India – KIOT, Centre of Excellence					
Subject Name	Components sizing and selection for chilled water type HVAC system				
Name of the Student	Harisurya S				
Register No	611216114321				
Date	25/02/2019	Duration	60 Minutes	Max.Marks	50
Faculty Name	Marks Awarded				
S. SARAVANAN	44		FOUR FOUR		
Faculty Signature					

ANSWER ALL THE QUESTIONS-(50X01=50)

1. Which of the following refrigerant is highly toxic and flammable?
(A) Ammonia (B) Carbon dioxide (C) Sulphur dioxide (D) R-12
2. The dehumidification process, on the psychrometric chart, is shown by
(A) Horizontal line (B) Vertical line (C) Inclined line (D) Curved line
3. The wet bulb temperature at 100% relative humidity is _____ dry bulb temperature.
(A) Same as (B) Lower than (C) Higher than (D) None of these
4. The human body feels comfortable when the heat stored in the body is
(A) Positive (B) Negative (C) Zero (D) None of these
5. The heat rejection factor (HRF) is given by
(A) 1 + C.O.P (B) 1 - C.O.P. (C) 1 + (1/C.O.P) (D) 1 - (1/C.O.P)
6. In order to collect liquid refrigerant and to prevent it from going to a _____, a device known as accumulator is used at the suction of compressor.
(A) Compressor (B) Condenser (C) Expansion valve (D) Evaporator
7. The vertical and uniformly spaced lines on a psychrometric chart indicates
(A) Dry bulb temperature (B) Wet bulb temperature (C) Dew point temperature
(D) Specific humidity
8. The undesirable property of a refrigerant is
(A) Non-toxic (B) Non-flammable (C) Non-explosive (D) High boiling point
9. The process, generally used in summer air conditioning to cool and dehumidify the air, is called
(A) Humidification (B) Dehumidification (C) Heating and humidification
(D) Cooling and dehumidification
10. The leakage in a refrigeration system using ammonia is detected by
(A) Halide torch (B) Sulphur sticks (C) Soap and water (D) All of these
11. The lowest temperature during the cycle in a vapour compression system occurs after
(A) Compression (B) Expansion (C) Condensation (D) Evaporation
12. In a domestic refrigerator, a capillary tube controls the flow of refrigerant from the
(A) Expansion valve to the evaporator (B) Evaporator to the thermostat
(C) Condenser to the expansion valve (D) Condenser to the evaporator
13. The refrigerant used in small tonnage commercial machines (hermetically sealed units) is
(A) Ammonia (B) Carbon dioxide (C) Sulphur dioxide (D) R-12
14. When the air is passed through an insulated chamber having sprays of water maintained at a temperature higher than the dew point temperature of entering air but lower than its dry bulb temperature, then the air is said to be
(A) Cooled and humidified (B) Cooled and dehumidified
(C) Heated and humidified (D) Heated and dehumidified
15. A refrigerant compressor is used to
(A) Raise the pressure of the refrigerant (B) Raise the temperature of the refrigerant
(C) Circulate the refrigerant through the refrigerating system (D) All of the above
16. In aqua ammonia absorption refrigeration system, incomplete rectification leads to accumulation of water in
(A) Condenser (B) Evaporator (C) Absorber (D) None of these
17. Most air cooled condensers are designed to operate with a temperature difference of
(A) 5°C (B) 8°C (C) 14°C (D) 22°C

Principal,
Knowledge Institute of Technology
Kavuam (Po), Salem-637 504

18. In a reversed Brayton cycle, the heat is absorbed by the air during
(A) Isentropic compression process (B) Constant pressure cooling process
(C) Isentropic expansion process (D) Constant pressure expansion process
19. Wet bulb temperature is the temperature of air recorded by a thermometer, when
(A) It is not affected by the moisture present in the air
(B) Its bulb is surrounded by a wet cloth exposed to the air
(C) The moisture present in it begins to condense
(D) None of the above
20. The difference between dry bulb temperature and dew point temperature, is called
(A) Dry bulb depression (B) Wet bulb depression
(C) Dew point depression (D) Degree of saturation
21. In mechanical refrigeration system, the refrigerant has the maximum temperature
(A) In evaporator (B) Before expansion valve
(C) Between compressor and condenser (D) Between condenser and evaporator
22. The central air conditioning system has _____ overall efficiency as compared to individual systems.
(A) Same (B) Lower (C) Higher (D) None of these
23. Moisture should be removed from refrigerants to avoid
(A) Freezing at the expansion valve (B) Restriction to refrigerant flow
(C) Corrosion of steel plates (D) All of these
24. The specific humidity during humidification process
(A) Remains constant (B) Increases (C) Decreases (D) None of these
25. During a refrigeration cycle, heat is rejected by the refrigerant in a
(A) Compressor (B) Condenser (C) Evaporator (D) Expansion valve
26. In a vapour compression system, the condition of refrigerant is dry saturated vapour
(A) Before entering the compressor (B) After leaving the compressor
(C) Before entering the condenser (D) After leaving the condenser
27. During sensible cooling of air, specific humidity
(A) Remains constant (B) Increases (C) Decreases (D) None of these
28. In a psychrometric chart, specific humidity (moisture content) lines are
(A) Vertical and uniformly spaced (B) Horizontal and uniformly spaced
(C) Horizontal and non-uniformly spaced (D) Curved lines
29. The horizontal and non-uniformly spaced lines on a psychrometric chart indicates
(A) Dry bulb temperature (B) Wet bulb temperature
(C) Dew point temperature (D) Specific humidity
30. In a vapour compression refrigeration system, a throttle valve is used in place of an expander because
(A) It considerably reduces mass of the system (B) It improves the C.O.P., as the condenser is small
(C) The positive work in isentropic expansion of liquid is very small (D) It leads to significant cost reduction
31. The ratio of the actual mass of water vapour in a unit mass of dry air to the mass of water vapour in the same mass of dry air when it is saturated at the same temperature and pressure, is called
(A) Humidity ratio (B) Relative humidity (C) Absolute humidity (D) Degree of saturation
32. During dehumidification process, _____ remains constant.
(A) Wet bulb temperature (B) Relative humidity (C) Dry bulb temperature (D) Specific humidity
33. Pressure of water vapour is given by
(A) 0.622 Pv/ (Pb - Pv) (B) $\mu/[1 - (1 - \mu)(Ps/Pb)]$ (C) [Pv (Pb - Pd)]/ [Pd (Pb - Pv)] (D) None of these
34. R-12 is generally preferred over R-22 in deep freezers since
(A) It has low operating pressures (B) It gives higher coefficient of performance
(C) It is miscible with oil over large range of temperatures (D) All of the above
35. In a spray washing system, if the temperature of water is higher than the dry bulb temperature of entering air, then the air is
(A) Heated and dehumidified (B) Heated and humidified
(C) Cooled and humidified (D) Cooled and dehumidified
36. A valve which maintains a constant degree of superheat at the end of the evaporator coil, is called
(A) Automatic expansion valve (B) High side float valve
(C) Thermostatic expansion valve (D) Low side float valve

Principal,
Knowledge Institute of Technology
Kakapalayam (Po), Salem-637 504

37. An infinite parallel planes with emissivities e_1 and e_2, the interchange factor for radiation from surface 1 to surface 2 is given by

(A) $(e_1 + e_2)/ e_1 + e_2 - e_1e_2$ (B) $1/e_1 + 1/e_2$ (C) $e_1 + e_2$ (D) e_1e_2

38. The emissivity of a polished silver body is _____ as compared to black body.

(A) Same (B) Low (C) Very low (D) High

39. Air refrigerator works on

(A) Reversed Carnot cycle (B) Bell Coleman cycle (C) Both (A) and (B) (D) None of these

40. The relative coefficient of performance is equal to

(A) (Theoretical C.O.P.)/ (Actual C.O.P.) (B) (Actual C.O.P.) /(Theoretical C.O.P.)

(C) (Actual C.O.P.) × (Theoretical C.O.P.) (D) None of these

41. In case of sensible cooling of air, the coil efficiency is given by

(A) B.P.F. – 1 (B) 1 - B.P.F. (C) 1/ B.P.F. (D) 1 + B.P.F.

42. For large tonnage (more than 200 TR) air-conditioning applications, the compressor recommended is

(A) Reciprocating (B) Rotating (C) Centrifugal (D) Screw

43. The wet bulb temperature during sensible cooling of air

(A) Remains constant (B) Increases (C) Decreases (D) None of these

44. A condenser of refrigeration system rejects heat at the rate of 120 kW, while its compressor consumes a power of 30 kW. The coefficient of performance of the system will be

(A) ¼ (B) 1/3 (C) 3 (D) 4

45. A refrigerant with the highest critical pressure is

(A) R-11 (B) R-12 (C) R-22 (D) Ammonia

46. The unit of thermal diffusivity is

(A) m/hK (B) m/h (C) m^2/h (D) m^2/hK

47. The comfort conditions in air conditioning are at (where DBT = Dry bulb temperature, and RH = Relative humidity)

(A) 25°C DBT and 100% RH (B) 20°C DBT and 80% RH

(C) 22°C DBT and 60% RH (D) 25°C DBT and 40% RH

48. The pressure at the outlet of a refrigerant compressor is called

(A) Suction pressure (B) Discharge pressure (C) Critical pressure (D) Back pressure

49. The bypass factor, in case of sensible cooling of air, is given by (where td_1 = Dry bulb temperature of air entering the cooling coil, td_2 = Dry bulb temperature of air leaving the cooling coil, and td_3 = Dry bulb temperature of the cooling coil)

(A) $(td_1 - td_3)/(td_2 - td_3)$ (B) $(td_2 - td_3)/(td_1 - td_3)$ (C) $(td_3 - td_1)/(td_2 - td_3)$ (D) $(td_3 - td_2)/(td_1 - td_3)$

50. The operating temperature of a cold storage is 2°C. The heat leakage from the surrounding is 30 kW for the ambient temperature of 40°C. The actual C.O.P. of refrigeration plant used is one fourth that of ideal plant working between the same temperatures. The power required to drive the plant is

(A) 1.86 kW (B) 3.72 kW (C) 7.44 kW (D) 18.6 kW

FACULTY I/C

HOD/MECH

Principal,
Knowledge Institute of Technology
Kakapalayam (Po), Salem-637 504

KNOWLEDGE INSTITUTE OF TECHNOLOGY					
DEPARTMENT OF MECHANICAL ENGINEERING					
IAPMO-India – KIOT, Centre of Excellence					
Subject Name	Components sizing and selection for chilled water type HVAC system				
Name of the Student	Viswajith S				
Register No	611216114359				
Date	25/2/2019	Duration	60 Minutes	Max.Marks	50
Faculty Name	Marks Awarded				
S. SARAVANAN	33		THREE THREE		
Faculty Signature					

ANSWER ALL THE QUESTIONS-(50X01=50)

1. Which of the following refrigerant is highly toxic and flammable?
(A) Ammonia (B) Carbon dioxide (C) Sulphur dioxide (D) R-12
2. The dehumidification process, on the psychrometric chart, is shown by
(A) Horizontal line (B) Vertical line (C) Inclined line (D) Curved line
3. The wet bulb temperature at 100% relative humidity is _____ dry bulb temperature.
(A) Same as (B) Lower than (C) Higher than (D) None of these
4. The human body feels comfortable when the heat stored in the body is
(A) Positive (B) Negative (C) Zero (D) None of these
5. The heat rejection factor (HRF) is given by
(A) 1 + C.O.P (B) 1 - C.O.P. (C) 1 + (1/C.O.P) (D) 1 - (1/C.O.P)
6. In order to collect liquid refrigerant and to prevent it from going to a _____, a device known as accumulator is used at the suction of compressor.
(A) Compressor (B) Condenser (C) Expansion valve (D) Evaporator
7. The vertical and uniformly spaced lines on a psychrometric chart indicates
(A) Dry bulb temperature (B) Wet bulb temperature (C) Dew point temperature
(D) Specific humidity
8. The undesirable property of a refrigerant is
(A) Non-toxic (B) Non-flammable (C) Non-explosive (D) High boiling point
9. The process, generally used in summer air conditioning to cool and dehumidify the air, is called
(A) Humidification (B) Dehumidification (C) Heating and humidification
(D) Cooling and dehumidification
10. The leakage in a refrigeration system using ammonia is detected by
(A) Halide torch (B) Sulphur sticks (C) Soap and water (D) All of these
11. The lowest temperature during the cycle in a vapour compression system occurs after
(A) Compression (B) Expansion (C) Condensation (D) Evaporation
12. In a domestic refrigerator, a capillary tube controls the flow of refrigerant from the
(A) Expansion valve to the evaporator (B) Evaporator to the thermostat
(C) Condenser to the expansion valve (D) Condenser to the evaporator
13. The refrigerant used in small tonnage commercial machines (hermetically sealed units) is
(A) Ammonia (B) Carbon dioxide (C) Sulphur dioxide (D) R-12
14. When the air is passed through an insulated chamber having sprays of water maintained at a temperature higher than the dew point temperature of entering air but lower than its dry bulb temperature, then the air is said to be
(A) Cooled and humidified (B) Cooled and dehumidified
(C) Heated and humidified (D) Heated and dehumidified
15. A refrigerant compressor is used to
(A) Raise the pressure of the refrigerant (B) Raise the temperature of the refrigerant
(C) Circulate the refrigerant through the refrigerating system (D) All of the above
16. In aqua ammonia absorption refrigeration system, incomplete rectification leads to accumulation of water in
(A) Condenser (B) Evaporator (C) Absorber (D) None of these
17. Most air cooled condensers are designed to operate with a temperature difference of
(A) 5°C (B) 8°C (C) 14°C (D) 22°C

Principal,
Knowledge Institute of Technology
Kakapalayam (Po), Salem-637 504

37. An infinite parallel planes with emissivities e_1 and e_2, the interchange factor for radiation from surface 1 to surface 2 is given by
(A) $(e_1 + e_2)/ e_1 + e_2 - e_1e_2$ (B) $1/e_1 + 1/e_2$ (C) $e_1 + e_2$ (D) e_1e_2
38. The emissivity of a polished silver body is _____ as compared to black body.
(A) Same (B) Low (C) Very low (D) High
39. Air refrigerator works on
(A) Reversed Carnot cycle (B) Bell Coleman cycle (C) Both (A) and (B) (D) None of these
40. The relative coefficient of performance is equal to
(A) (Theoretical C.O.P.)/ (Actual C.O.P.) (B) (Actual C.O.P.) /(Theoretical C.O.P.)
(C) (Actual C.O.P.) × (Theoretical C.O.P.) (D) None of these
41. In case of sensible cooling of air, the coil efficiency is given by
(A) B.P.F. – 1 (B) 1 - B.P.F. (C) 1/ B.P.F. (D) 1 + B.P.F.
42. For large tonnage (more than 200 TR) air-conditioning applications, the compressor recommended is
(A) Reciprocating (B) Rotating (C) Centrifugal (D) Screw
43. The wet bulb temperature during sensible cooling of air
(A) Remains constant (B) Increases (C) Decreases (D) None of these
44. A condenser of refrigeration system rejects heat at the rate of 120 kW, while its compressor consumes a power of 30 kW. The coefficient of performance of the system will be
(A) ¼ (B) 1/3 (C) 3 (D) 4
45. A refrigerant with the highest critical pressure is
(A) R-11 (B) R-12 (C) R-22 (D) Ammonia
46. The unit of thermal diffusivity is
(A) m/hK (B) m/h (C) m^2/h (D) m^2/hK
47. The comfort conditions in air conditioning are at (where DBT = Dry bulb temperature, and RH = Relative humidity)
(A) 25°C DBT and 100% RH (B) 20°C DBT and 80% RH
(C) 22°C DBT and 60% RH (D) 25°C DBT and 40% RH
48. The pressure at the outlet of a refrigerant compressor is called
(A) Suction pressure (B) Discharge pressure (C) Critical pressure (D) Back pressure
49. The bypass factor, in case of sensible cooling of air, is given by (where td_1 = Dry bulb temperature of air entering the cooling coil, td_2 = Dry bulb temperature of air leaving the cooling coil, and td_3 = Dry bulb temperature of the cooling coil)
(A) $(td_1 - td_3)/(td_2 - td_3)$ (B) $(td_2 - td_3)/(td_1 - td_3)$ (C) $(td_3 - td_1)/(td_2 - td_3)$ (D) $(td_3 - td_2)/(td_1 - td_3)$
50. The operating temperature of a cold storage is 2°C. The heat leakage from the surrounding is 30 kW for the ambient temperature of 40°C. The actual C.O.P. of refrigeration plant used is one fourth that of ideal plant working between the same temperatures. The power required to drive the plant is
(A) 1.86 kW (B) 3.72 kW (C) 7.44 kW (D) 18.6 kW

FACULTY I/C

HOD/MECH

Principal,
Knowledge Institute of Technology
Kakapalayam (Po), Salem-637 504

KNOWLEDGE INSTITUTE OF TECHNOLOGY, SALEM-637504

DEPARTMENT OF MECHANICAL ENGINEERING

CENTER FOR HEATING VENTILATION AND AIR CONDITIONING

BATCH- (2016 - 20) AY: 2018-19

Components Sizing and Selection for Chilled Water Type HVAC- Mark Statement

Max.Marks: 50

Year/ Sem: III / VI

Date: 28.02.2019

S.No.	Register Number	Student Name	Mark Secured	Result Status
1.	611216114009	BASKAR N	37	PASS
2.	611216114012	BLESSY JEYAPAULINE J	42	PASS
3.	611216114015	DEEPAK KUMAR V M	30	PASS
4.	611216114016	DEVAKRISHNA K	33	PASS
5.	611216114020	DHUKILAN S	44	PASS
6.	611216114021	DHYANESHKANNA R	40	PASS
7.	611216114024	DINAKARAN S	27	PASS
8.	611216114028	DINESHKUMAR T	30	PASS
9.	611216114030	DIVAKAR P	33	PASS
10.	611216114038	GOKULNATH S	36	PASS
11.	611216114040	GOKULRAJ P	31	PASS
12.	611216114049	HARISH B	35	PASS
13.	611216114050	HARI VENKATESH Y	43	PASS
14.	611216114053	JAWAHARBALAJI S	41	PASS
15.	611216114054	JEEVARAJAN M	27	PASS
16.	611216114055	JOSHUA JACOB S	29	PASS
17.	611216114057	KARTHICK M	32	PASS
18.	611216114058	KARTHICK R	31	PASS
19.	611216114060	KARTHICK RAJA K	32	PASS
20.	611216114061	KARTHIKEYAN M	36	PASS
21.	611216114062	KARTHIKEYAN S	29	PASS
22.	611216114063	KARTHIKRAJA A	28	PASS
23.	611216114064	KATHIRVEL C	27	PASS
24.	611216114069	KISHOR KUMAR K	32	PASS
25.	611216114075	MANISOWDESVAR J	29	PASS
26.	611216114092	NAVEENPRAKASH S	33	PASS
27.	611216114098	PAUL SIMON THEKKANATH	27	PASS
28.	611216114100	PAVITHRAN K	31	PASS
29.	611216114101	POOVENTHAN J	32	PASS
30.	611216114102	PRADEEP S	36	PASS
31.	611216114105	PRAKASH T	29	PASS
32.	611216114108	PRASANTH D	28	PASS
33.	611216114111	PRAVEEN M E	41	PASS
34.	611216114128	SAIGIRISH O E	36	PASS
35.	611216114129	SAKTHI M	31	PASS
36.	611216114172	VINOTH KUMAR K	38	PASS
37.	611216114308	DINESH KUMAR P	29	PASS
38.	611216114321	HARI SURYA S	44	PASS
39.	611216114331	NAGAPPAN N	40	PASS
40.	611216114346	SELLADURAI R	27	PASS
41.	611216114351	SURENTHAR R	30	PASS
42.	611216114359	VISWAJITH S	33	PASS
43.	611216114009	BASKAR N	32	PASS

Note: Minimum 25 marks will be considered as pass mark for this certification course.

FACULTY I/C

HOD/MECH

Principal,
Knowledge Institute of Technology
Kanjalavam (Po), Salem-637 504.

PRINCIPAL

KNOWLEDGE INSTITUTE OF TECHNOLOGY, SALEM
Department of Mechanical Engineering

FEEDBACK FORM
CERTIFICATION COURSE (HVAC)

Academic Year: 2018-19 Date: 21/02/2019

		Strongly agree	Agree	Neutral	Disagree	Strongly disagree
1	About Teaching Methodology			~		
2	About training handled by faculty			~		
3	About Practical Session		~			
4	About Industries Practice		~			
5	Knowledge Beyond the syllabus			~		
6	Overall Experience about this course			~		

Suggestion for Improvement:

- industrial visit is need
- practical example are need

Student Signature: R. Dhyanesh (R. Dhyaneshkannan)

Principal,
Knowledge Institute of Technology
Kakapalayam (Po), Salem-637 504

KNOWLEDGE INSTITUTE OF TECHNOLOGY, SALEM
Department of Mechanical Engineering

FEEDBACK FORM
CERTIFICATION COURSE (HVAC)

Academic Year: 2018-19 Date: 21/02/2019

		Strongly agree	Agree	Neutral	Disagree	Strongly disagree
1	About Teaching Methodology		✓			
2	About training handled by faculty			✓		
3	About Practical Session					
4	About Industries Practice		✓			✓
5	Knowledge Beyond the syllabus			✓		
6	Overall Experience about this course				✓	

Suggestion for Improvement:

- Need more practical Session
- Teaching methodology should improve

Student Signature:	[KARTHICK.M]

Principal,
Knowledge Institute of Technology,
Kanjikovil (Po), Salem-637 504.

KNOWLEDGE INSTITUTE OF TECHNOLOGY, SALEM
Department of Mechanical Engineering

FEEDBACK FORM
CERTIFICATION COURSE (HVAC)

Academic Year: 2018-19 Date: 21/02/2019

		Strongly agree	Agree	Neutral	Disagree	Strongly disagree
1	About Teaching Methodology			✓		
2	About training handled by faculty				✓	
3	About Practical Session		✓			
4	About Industries Practice			✓		
5	Knowledge Beyond the syllabus			✓		
6	Overall Experience about this course		✓			

Suggestion for Improvement:

⇒ Need more Industrial Visit and Practical Sessions.

Student Signature: K.Karthickraja [K.KARTHICKRAJA]

Principal,
Knowledge Institute of Technology
Kakapalayam (Po), Salem-637 504

KNOWLEDGE INSTITUTE OF TECHNOLOGY, SALEM
Department of Mechanical Engineering

FEEDBACK FORM
CERTIFICATION COURSE (HVAC)

Academic Year: 2018-19 **Date:** 21/02/2019

		Strongly agree	Agree	Neutral	Disagree	Strongly disagree
1	About Teaching Methodology		✓			
2	About training handled by faculty			✓		
3	About Practical Session		✓			
4	About Industries Practice			✓		
5	Knowledge Beyond the syllabus				✓	
6	Overall Experience about this course			✓		

Suggestion for Improvement:

i) Need more life time projects
ii) Need more Industrial practice

Student Signature:	Harisurya (Harisurya S)

Principal,
Knowledge Institute of Technology
Kanjalavam (Po), Salem-637 504

KNOWLEDGE INSTITUTE OF TECHNOLOGY, SALEM
Department of Mechanical Engineering

FEEDBACK FORM
CERTIFICATION COURSE (HVAC)

Academic Year: 2018-19 Date: 21/2/2019

		Strongly agree	Agree	Neutral	Disagree	Strongly disagree
1	About Teaching Methodology	✓				
2	About training handled by faculty		✓			
3	About Practical Session			✓		
4	About Industries Practice		✓			
5	Knowledge Beyond the syllabus		✓			
6	Overall Experience about this course				✓	

Suggestion for Improvement:

Need more technical teching.
Handson trainning needed.

Student Signature:	Visurjith.S (Visurjith S).

Principal,
Knowledge Institute of Technology
Kakapalayam (Po), Salem-637 504

IAPMO-INDIA & KNOWLEDGE INSTITUTE OF TECHNOLOGY

DEPARTMENT OF MECHANICAL ENGINEERING

Certificate of Completion

This certificate is awarded to

DHYANESHKANNA R (611216114021)

In recognition of sucessful completion of
"*Components sizing and selection for chilled water type HVAC system*"

Conducted by "IIK-Center" from 01.02.2019 to 21.02.2019 Department of Mechanical Engineering, Knowledge Institute of Technology salem, Tamilnadu, India.

HOD/Mech

Principal,
Knowledge Institute of Technology
Kanalavam (Po), Salem-637 504

Principal

IAPMO-INDIA & KNOWLEDGE INSTITUTE OF TECHNOLOGY

DEPARTMENT OF MECHANICAL ENGINEERING

Certificate of Completion

This certificate is awarded to

KARTHICK M (611216114057)

In recognition of sucessful completion of
"*Components sizing and selection for chilled water type HVAC system*"

Conducted by "IIK-Center" from 01.02.2019 to 21.02.2019
Department of Mechanical Engineering, Knowledge Institute of Technology salem, Tamilnadu, India.

HOD/Mech

Principal,
Knowledge Institute of Technology
Kakapalayam (Po), Salem-637 504

Principal

IAPMO-INDIA & KNOWLEDGE INSTITUTE OF TECHNOLOGY

DEPARTMENT OF MECHANICAL ENGINEERING

Certificate of Completion

This certificate is awarded to

KARTHICKRAJA K (611216114060)

In recognition of sucessful completion of
"*Components sizing and selection for chilled water type HVAC system*"

Conducted by "IIK-Center" from 01.02.2019 to 21.02.2019
Department of Mechanical Engineering, Knowledge Institute of Technology salem, Tamilnadu, India.

Principal,
Knowledge Institute of Technology
Kanalavam (Po), Salem-637 504

HOD/Mech

Principal

IAPMO-INDIA & KNOWLEDGE INSTITUTE OF TECHNOLOGY

DEPARTMENT OF MECHANICAL ENGINEERING

Certificate of Completion

This certificate is awarded to

HARISURYA S (611216114321)

In recognition of sucessful completion of
"*Components sizing and selection for chilled water type HVAC system*"

Conducted by "IIK-Center" from 01.02.2019 to 21.02.2019 Department of Mechanical Engineering, Knowledge Institute of Technology salem, Tamilnadu, India.

HOD/Mech

Principal,
Knowledge Institute of Technology
Kalavam (Po), Salem-637 504

Principal

IAPMO-INDIA & KNOWLEDGE INSTITUTE OF TECHNOLOGY

DEPARTMENT OF MECHANICAL ENGINEERING

Certificate of Completion

This certificate is awarded to

VISWAJITH S (611216114359)

In recognition of sucessful completion of
"*Components sizing and selection for chilled water type HVAC system*"

Conducted by "IIK-Center" from 01.02.2019 to 21.02.2019 Department of Mechanical Engineering, Knowledge Institute of Technology salem, Tamilnadu, India.

Principal,
Knowledge Institute of Technology
Kat[illegible]ayam (Po), Salem-637 504.

HOD/Mech **Principal**

PDF Compressor Free Version

KNOWLEDGE INSTITUTE OF TECHNOLOGY, SALEM-637 504
DEPARTMENT OF ECE
NPTEL ONLINE COURSES Registration Details
Academic Year 2018 - 2019

Date:12.01.19

S.No	Reg. No	Name of the Student	Year / Sec	Course Name
1	611217106031	GOWSHIGA A	II ECE A	Principles of Communication System I
2	611217106037	HEMALATHA M	II ECE B	Coduing Theory, Introduction to CMOS
3	611217106043	JAMUNA DHEVI B	II ECE B	Contorl System Engineering
4	611217106055	KEERTHANA A	II ECE A	Principles of Communication System I
5	611217106059	MADHUMITHA R	II ECE B	Digital Circuits II
6	611217106069	MUTHU KOKILA S	II ECE A	Principles of Communication System I
7	611217106070	MYVIZHI G	II ECE B	Embedded systems
8	611217106071	NANDINI K	II ECE A	Principles of Communication System I
9	611217106074	NAVEENA T	II ECE A	Principles of Communication System I
10	611217106075	NIVETHA K	II ECE B	Principles of Communication System I
11	611217106078	PASUMITHA G S	II ECE B	Principles of Communication System I
12	611217106083	PORKODI M	II ECE B	Digital Electronics
13	611217106086	PREETHI MAHA D	II ECE A	Principles of Communication System I
14	611217106088	PRIYA S	II ECE B	Coding Theory
15	611217106089	PRIYADHARSHINI P	II ECE A	Principles of Communication System I
16	**611217106108**	**SRIRANJANI R**	II ECE A	**Principles of Communication System I, Electoro Magnetic waves in Guided and wireless media**
17	**611216106014**	**BHUVANESWARI.A**	III ECE A	Introdcution to internet of things, Joy of computing using Python
18	611216106021	DHANUSUYA S	III ECE A	Introdcution to internet of things
19	**611216106022**	**DHARINI SHREE K**	III ECE A	**Digital Electronic Circuits**
20	611216106026	DIVYA GAYATHRI.S	III ECE A	Introdcution to internet of things
21	611216106073	RAGHAVENDAR R	III ECE A	Introdcution to internet of things
22	611216106082	SATHISHKUMAR M	III ECE A	Joy of computing using Python
23	611216106098	THARUN T	III ECE A	Introdcution to internet of things
24	611216106004	ANITHA S	III ECE B	Digital Electronic Circuits
25	611216106011	BHARATHI PRIYA K M	III ECE B	Digital Electronic Circuits
26	611216106039	JEEVANANTH S	III ECE B	Introdcution to internet of things
27	611216106041	KANITHRA P	III ECE B	Introdcution to internet of things
28	611216106052	LOKESH S	III ECE B	Principles of Communication System I
29	611216106055	MAHADHIR MOHAMMED S	III ECE B	Joy of computing using Python
30	611216106068	PRADHEEPA S	III ECE B	Joy of computing using Python

Principal,
Knowledge Institute of Technology
Kavam (Po), Salem-637 504

12/1/19
HOD/ECE

PDF Compressor Free Version

NPTEL ONLINE COURSES Registration Details

Academic Year 2018 - 2019

Date: 12.01.2019

S.No	Reg. No	Name of the Student	Year / Sec	Course Name	Status
1	611217106031	GOWSHIGA A	II ECE A	Principles of Communication System I	Ongoing
2	611217106037	HEMALATHA M	II ECE B	Coding Theory, Introduction to CMOS	Ongoing
3	611217106043	JAMUNA DHEVI B	II ECE B	Control System Engineering	Ongoing
4	611217106055	KEERTHANA A	II ECE A	Principles of Communication System I	Ongoing
5	611217106059	MADHUMITHA R	II ECE B	Digital Circuits II	Ongoing
6	611217106060	MUTHU KOKILA S	II ECE A	Principles of Communication System I	Ongoing
7	611217106070	MYVIZHI G	II ECE B	Embedded systems	Ongoing
8	611217106071	NANDINI K	II ECE A	Principles of Communication System I	Ongoing
9	611217106074	NAVEENA T	II ECE A	Principles of Communication System I	Ongoing
10	611217106075	NIVETHA K	II ECE B	Principles of Communication System I	Ongoing
11	611217106078	PASUMITHA G S	II ECE B	Principles of Communication System I	Ongoing
12	611217106083	PORKODI M	II ECE B	Digital Electronics	Ongoing
13	611217106086	PREETHI MAHA D	II ECE A	Principles of Communication System I	Ongoing
14	611217106088	PRIYA S	II ECE B	Coding Theory	Ongoing
15	611217106089	PRIYADHARSHINI P	II ECE A	Principles of Communication System I	Ongoing
16	**611217106108**	**SRIRANJANI R**	**II ECE A**	**Principles of Communication System I, Electoro Magnetic waves in Guided and wireless media**	**Ongoing**
17	**611216106014**	**BHUVANESWARI A**	**III ECE A**	**Introdcution to internet of things, Joy of computing using Python**	**Ongoing**
18	611216106021	DHANUSUYA S	III ECE A	Introdcution to internet of things	Ongoing
19	**611216106022**	**DHARINI SHREE K**	**III ECE A**	**Digital Electronic Circuits**	**Ongoing**
20	611216106026	DIVYA GAYATHRI S	III ECE A	Introdcution to internet of things	Ongoing
21	611216106073	RAGHAVENDAR R	III ECE A	Introdcution to internet of things	Ongoing
22	611216106082	SATHISHKUMAR M	III ECE A	Joy of computing using Python	Ongoing
23	611216106098	THARUN T	III ECE A	Introdcution to internet of things	Ongoing
24	611216106004	ANITHA S	III ECE B	Digital Electronic Circuits	Ongoing
25	611216106011	BHARATHI PRIYA K M	III ECE B	Digital Electronic Circuits	Ongoing
26	611216106039	JEEVANANTH S	III ECE B	Introdcution to internet of things	Ongoing
27	611216106041	KANITHRA P	III ECE B	Introdcution to internet of things	Ongoing
28	611216106052	LOKESH S	III ECE B	Principles of Communication System I	Ongoing
29	611216106055	MAHADHIR MOHAMMED S	III ECE B	Joy of computing using Python	Ongoing
30	611216106068	PRADHEEPA S	III ECE B	Joy of computing using Python	Ongoing

Principal,
Knowledge Institute of Technology
Kanalayam (Po), Salem-637 504.

12/1/19
HOD/ECE

PDF Compressor Free Version

Elite

NPTEL Online Certification

(Funded by the Ministry of HRD, Govt. of India)

This certificate is awarded to

ANITHA S

for successfully completing the course

Introduction to Internet of Things

with a consolidated score of **78 %**

Online Assignments	22.81/25	*Proctored Exam*	55.5/75

Total number of candidates certified in this course: **3617**

Prof. Anupam Basu
NPTEL Coordinator
IIT Kharagpur

Jul-Oct 2018
(12 week course)

A. Goswami
Prof. Adrijit Goswami
Dean
Continuing Education, IIT Kharagpur

Indian Institute of Technology Kharagpur

Principal,
Knowledge Institute of Technology
Kakapalayam (Po), Salem-637 504

FREE ONLINE EDUCATION
swayam

Roll No: NPTEL18CS46S11940184

To validate and check scores: http://nptel.ac.in/noc

PDF Compressor Free Version

KNOWLEDGE INSTITUTE OF TECHNOLOGY, SALEM-637 504

DEPARTMENT OF ECE

NPTEL ONLINE COURSES REGISTRATION DETAILS

ACADEMIC YEAR 2017 - 2018

Date:25.07.17

S.No	Reg. No	Name of the Student	YEAR	Course Name
1	611214106004	AMIRTHA VARSHINI S	IV ECE	Design of Internet of things
2	611214106012	DHANASEKARAN A	IV ECE	Design of Internet of things
3	611214106021	GOWRI B	IV ECE	Design of Internet of things
4	611214106036	MALATHI M	IV ECE	Design of Internet of things
5	611214106040	MOULIKA M	IV ECE	Design of Internet of things
6	611214106063	RAJAMURUGAN S	IV ECE	Design of Internet of things
7	611214106073	SATHISHKUMAR R	IV ECE	Design of Internet of things
8	611214106078	SIVABALAN R	IV ECE	Design of Internet of things
9	611214106088	VIGNESH S	IV ECE	Design of Internet of things
10	611214106093	VISHALI R	IV ECE	Design of Internet of things
11	611214106303	BOOPATHY J	IV ECE	Design of Internet of things
12	611214106318	VIGNESHWARAN M	IV ECE	Design of Internet of things
13	611215106005	ANURAKSHANA M	III ECE	Satellite Communication
14	611215106006	ARAVINTH K	III ECE	Introduction of C
15	611215106008	ARNIKA PRAISY	III ECE	Application Development
16	611215106012	ATHIRA K R	III ECE	Application Development
17	611215106016	DEVI T S	III ECE	Application development
18	611215106023	GOKULRAJ K	III ECE	Digital Image processing
19	611215106026	GOWTHAM S	III ECE	Introduction to IOT
20	611215106035	ISWARYA P	III ECE	Introduction of IOT
21	611215106042	KAVITHA V	III ECE	Digital Speech Processing
22	611215106051	MALATHI C	III ECE	Digital communication
23	611215106060	MOOGAMBIGAI G R	III ECE	Application development
24	611215106070	POOJA S N	III ECE	Android App development

Principal,
Knowledge Institute of Technology
Kakapalayam (Po), Salem-637 504

PDF Compressor Free Version

25	611215106072	PRAVEENKUMAR J	III ECE	Introduction to C
26	611215106086	RAMYALAKSHMI M	III ECE	Application development
27	611215106115	UMAMAHESWARI G	III ECE	IMAD
28	611215106118	VIGHNESH V G	III ECE	Satellite Communication
29	611215106001	AGILAN P	III ECE	Introduction to Wireless and Cellular Networks
30	611215106003	AKILA T	III ECE	Introduction to Wireless and Cellular Networks
31	611215106004	ANU K	III ECE	DIP using remote Sensor
32	611215106015	DEEPTH M	III ECE	C, C++, Python, IOT, Loud Computing
33	611215106024	GOMATHI D	III ECE	Introduction to C
34	611215106025	GOWSIKA V	III ECE	Algorithm and Python
35	611215106036	ISWARYA S	III ECE	Introduction to C
36	611215106039	KANISHKAR K R	III ECE	Loud Computing
37	611215106040	KARTHIKA S	III ECE	Modern digital Communication
38	611215106041	KAVITHA M	III ECE	Basic Electronic CircuitS
39	611215106044	KAVIYA S (05.12.1997)	III ECE	Soft Skills
40	611215106052	MANIKANDAN S	III ECE	Visual Communication
41	611215106058	MONISHA G	III ECE	Development of soft Skills
42	611215106068	OVIYA S	III ECE	Loud Computing
43	611215106069	PAVITHRA A	III ECE	Introduction to C
44	**611215106074**	**PRAVEEN KUMAR B K**	**III ECE**	**Design of IOT, Mobile app development**
45	611215106088	ROJA M	III ECE	Internet of things
46	611215106092	SAKUNTHALA DEVI K	III ECE	Modern digital Communication
47	611215106099	SASIKALA P	III ECE	Introduction to C
48	611216106006	ANU RAMYA N	II ECE	Data structures & Algorithms using Python
49	611216106012	BHARATH KUMAR. N	II ECE	Cloud Computing
50	611216106014	BHUVANESWARI.A	II ECE	Design for Electronic Equipments
51	611216106019	DHAARSHINI.R	II ECE	App Development

Principal,
Knowledge Institute of Technology
Kakapalayam (Po), Salem-637 504

PDF Compressor Free Version

52	611216106021	DHANUSUYA S	II ECE	App Development
53	**611216106004**	**ANITHA S**	**II ECE**	**Principles of Communication Systems - I**
54	611216106036	JAGADESHWARAN. D	II ECE	Introduction to modern Application Development
55	611216106046	KARTHIKEYAN. G	II ECE	Introduction to Wireless and celluar Communication
56	611216106054	MAGESHWARAN G	II ECE	Literature for Competitive Exam
57	611216106069	PRIVARTHINI.B	II ECE	Internet of things
58	611216106070	PRIYAADHARSHINI.J	II ECE	Introduction in C Programming
59	611216106082	SATHISH KUMAR. M	II ECE	Introduction about Wireless and Cellular Communication
60	611216106086	SIVA SWARNAMALYA	II ECE	Basic Electric Circuit
61	611216106087	SNEGA. G	II ECE	Hardware Derigning Verilog
62	611216106089	SOWMIYAA. P	II ECE	Introduction in C Programming
63	611216106095	SWETHA PRIYA.M	II ECE	Fundamentals of Java Script
64	611216106097	THANABAL. M	II ECE	Object Oriented C++
65	611216106005	ANITHANANDHINI. B	II ECE	Introduction in C Programming
66	**611216106098**	**THARUN T**	**II ECE**	**Baric Electric Circuits**
67	611216106026	DIVYA GAYATHRI.S	II ECE	Internet of things
68	611216106055	MAHADHIR MOHAMMED.S	II ECE	Programming in C++
69	611216106015	BOOPATHI.P.S	II ECE	Introction on C Programming
70	611216106077	RUBINI.T	II ECE	Programming in C++

HOD/ECE

Principal,
Knowledge Institute of Technology
Kakapalayam (Po), Salem-637 5

KNOWLEDGE INSTITUTE OF TECHNOLOGY, SALEM-637504

DEPARTMENT OF ELECTRICAL AND ELECTRONICS ENGINEERING

REPORT OF THE EVENT

Date	:	28.12.18 to 12.1.19 (42 Hours)	**Resource person**	:	**Global CADD Technology** 38, Kalaimagal St, Alagapuram Pudur, Salem, Tamil Nadu 636004 (External)
Time	:	3.30 pm to 7.00pm	**Title**	:	Certification Course on- "Electrical wiring circuit design using Electrical CAD"
Venue	:	E-Block 3rd Floor- MTLC & CC9 lab.	**No. of Participants**	:	78

- Resource Person discussed about basics of CAD/CAM/CAE, concept of Electrical CAD.
- Course also covered about coordinate System, Line, XLine, Rectangle, Copy, Offset Polygen, Array, Move, Rotate, Mirror, Erase, Arc, Circles, Trim, Extend, Scale, Stretch.
- On Day 5 to 8 student had Drawing Practice on Ellipse, Spline, Point, Donut, Extend, Break Fillet, Chamfer, Explode, Divide, Object Selection Method, Drafting Settings, Properties, Match Properties, Block, Wblock, Hatch, Display, Order, Single line text, Multi line text, Table, Boundary, Region, Parametric Modeling & Dimensioning.
- Student Undergone Test in Inserting Schematic Components, Symbols, Components from list, Connectors, Terminals, Multi-Level Terminals on day 9 and 10.
- Resource person delivered the development of circuit Design practically.

Encl: Circular / Lesson Plan / Attendance Sheet / Feedback

Principal,
Knowledge Institute of Technology
Kakapalayam (Po), Salem

KNOWLEDGE INSTITUTE OF TECHNOLOGY, SALEM - 637 504			
CIRCULAR			
Circular No.	KIOT/2018-19/CC/EE/01	**Date**	24.11.2018
To	II-Year EEE students		
Subject	Certification Course- Reg.		
Circular issued by	Department of Electrical & Electronics Engineering.		

This is to inform you that Department of Electrical & Electronics Engineering has planned to conduct a **Certification course on Electrical wiring circuit design using Electrical CAD** for II year students. Interested candidates are requested to register their names to Faculty Coordinator.

SL. NO.	Name of The Program	Venue	Date & Time (No of Hours)	Resource Person
1	Electrical wiring circuit design using Electrical CAD	E-Block 3rd Floor- MTLC & CC9 lab	28.12.18 to 12.1.19 & 3.30 pm to 7.00pm (42 Hours)	Global CADD Technology (External)

For Further Details & Registration Kindly Contact:

Mr.B.Sasikumar, ASP/EEE & Dept. certification Course Coordinator

SENDER		PRINCIPAL

MECH	VP Office	CIVIL	EEE	ECE	CSE	S&H	PD	LIB	EMS	AO	Trans-port I/C	Hostel NB	Director / Training	Director / Placement	Residential Warden		College NB	Office / File	Class Circula-tion	Security Office	KBS	Recep tion
															LH	GH						
			•										•	•			•	•	•			

Checked by Principal office I/C		Verified by the sender	

File :

1) Principal Office :
2) Concerned issuing department :

Principal,
Knowledge Institute of Technology
Kakapalayam (Po), Salem

From

24/12/2018, Salem

Mr.B.Sasikumar,
Associate Professor,
Department of Electrical and Electronics engineering,
Knowledge Institute of Technology,
Salem- 637 504.

To

The Principal,
Knowledge Institute of Technology,
Salem- 637504.

Through,
Head of the Department/EEE

Respected Sir,

Subject: Requisition for Conducting Certification Course-Reg.

We have planned to conduct certification course on "**Electrical wiring circuit design using Electrical CAD**" from 28.12.18 to 12.1.19 for a period of 14 days with the duration of 42 hours. It will be helpful for our II Year Electrical and Electronics engineering students through which they can enrich their knowledge in Electrical CAD in Autodesk software. In this regards we request you to endowment as permission to conduct the course. This course is not in our curriculum and will be helpful for the skill development of our students.

The course details are as follows:

Description	Particulars
Year	II (Electrical and Electronics engineering Students)
Name of the Course	**Electrical wiring circuit design using Electrical CAD**
Company/ Resource Person	**Global CADD Technology** 38, Kalaimagal St, Alagapuram Pudur, Salem, Tamil Nadu 636004
Total Number of Students Registered	78 Nos.

Thank you sir

Yours truly,

(Mr.B.Sasikumar)

HOD/EEE

PRINCIPAL

Principal,
Knowledge Institute of Technology
Kakapalayam (Po), Salem-637 504

KNOWLEDGE INSTITUTE OF TECHNOLOGY

DEPARTMENT OF ELECRICAL AND ELECTRONICS ENGINEERING

Date: 03.05.18

Submitted to the Principal for Approval

Based on the QIC meeting recommendation and PAC meeting approval, it is proposed to conduct the following Certificate Courses, Value Added Courses and Vocational Education training courses for the AY 2018-19.

S.No.	Type of the Course (CC, VAC & VET)	Name of the Course	Duration (Hrs)	Target Student	Remarks
1	CC	Electrical wiring circuit design using Electrical CAD	42	II-EEE	Existing Course and Continuing
2	VAC	Programming in Embedded C	36	II-EEE	New Course
3	VAC	Programming in PLC	36	III, IV-EEE	New Course

3/5/18

HOD/EEE

PRINCIPAL

Principal,
Knowledge Institute of Technology
Kakapalayam (Po), Salem-637 504

KNOWLEDGE INSTITUTE OF TECHNOLOGY

Department of Electrical and Electronics Engineering

Certification Course

Students Enrollment List

Academic Year: 2018-19 **Year/Sem:** II/IV **Date:** 24/12/2018

Name of the Course: Electrical wiring circuit design using Electrical CAD

S.No	Register No	Name of the Student
1	611217105001	AAFREEN S
2	611217105002	AARTHI B
3	611217105003	ABARANJI S
4	611217105006	ABITH HUSSAIN M
5	611217105007	AHAMAD AKTHUS S
6	611217105008	AJITH KUMAR V
7	611217105009	ANANTHAPOOJA A
8	611217105010	BARANI P
9	611217105011	BHAVITHRA S
10	611217105012	BHUVANES C
11	611217105013	CIBIAAKASH M
12	611217105016	DEEBIKA S
13	611217105017	DEEPAK R V
14	611217105019	DHARSHINI K M
15	611217105020	DHILIP A
16	611217105021	DINESH KANNA S
17	611217105025	ESNEYA N
18	611217105026	GHOURI K
19	611217105027	GOBINATH L
20	611217105028	GOKUL RAJ G
21	611217105030	GOWRI SHANKAR U
22	611217105031	GOWSIKA J
23	611217105032	GUNASEKARAN V
24	611217105034	HEMALATHA V
25	611217105036	JAGADEESH M
26	611217105037	JEEVA KP
27	611217105038	JEEVAPRIYA M
28	611217105039	JEEVA SUDHAN K
29	611217105040	KAARTHICK M
30	611217105042	KARTHICK S
31	611217105043	KAVIN KUMAR S
32	611217105044	KAVIPRIYA S
33	611217105046	KEERTHANA S
34	611217105047	KEERTHIKA S
35	611217105050	KOWSALYA A
36	611217105053	LAKSHMI SARASWATHI M
37	611217105054	MADHANMOHAN V
38	611217105056	MAHILAN R
39	611217105057	MANI R
40	611217105058	MANJULA B N
41	611217105062	MOHAMED ARSHATH M
42	611217105063	MOHAMMED IFRAN S
43	611217105066	NANDHINI S
44	611217105069	NAVEEN PRASANTH G
45	611217105070	NAVEEN SURYA S

Principal,
Knowledge Institute of Technology
Kakapalayam (Po), Salem-637 504

S.No	Register No	Name of the Student
46	611217105071	NITHEESH KUMAR R
47	611217105074	NITHEESH KUMAR S T
48	611217105075	PADMANABAN P
49	611217105076	PAVITHRAN M
50	611217105079	PRAVEEN N
51	611217105080	PRIYADHARSAN P
52	611217105082	PRIYATHARINI I
53	611217105083	RAGAVI L
54	611217105085	RAGHUVINDER P S
55	611217105087	RAJKUMAR M
56	611217105089	RISHI KESAN D
57	611217105092	SARAVANADEVA C
58	611217105093	SASIKUMAR S
59	611217105095	SHANMUGA PRIYA S
60	611217105097	SIVARANJANI M
61	611217105099	SOUNTHAR A
62	611217105101	SRINITHI G P
63	611217105102	SUBHA SHREE B
64	611217105105	SURIYAPRAKASH D
65	611217105106	SURIYHA C
66	611217105107	SURYA PRAKASH.V
67	611217105110	TAMILNITHI G
68	611217105112	VAISHNOW M
69	611217105113	VEEBEEN V
70	611217105116	VIGNESHWARI E
71	611217105117	VIJAYA BARATH G
72	611217105119	VIJITH P S
73	611217105122	YOKESHWARAN I
74	611217105302	ESWARAN M
75	611217105303	GUNASEKARAN A
76	611217105306	NANDHINI A
77	611217105307	NAVEEN KUMAR S
78	611217105309	VIGNESH A S

B. Sundar 24/12/24

CC Coordinator

HoD/EEE

Principal,
Knowledge Institute of Technol
Kakapalayam (Po), Salem-637 504.

GLOBAL
CADD TECHNOLOGY

2/38, First Floor, Kalaimagal Street,
Swarnapuri, Salem - 636 004.
■ 0427-4042435 ■ 84288 86528
■ e-mail: globalcaddtechnology@gmail.com
■ Web: www.globalcaddtech.com

Date: 04-11-18

To

THE HEAD OF THE DEPARTMENT,
DEPARTMENT OF ELECTRICAL AND ELECTRONICS ENGINEERING.
KNOWLEDGE INSTITUTE OF TECHNOLOGY,
SALEM.

Respected Sir,

Sub: In-Campus certificate course on SOFTWARE Training for your Students at your premises – reg.

We are very glad to inform you that we are providing training and services in IT and CAD/ CAM related courses at Salem. We are providing training at-par to the requirement of reputed companies. We ensure you that our training will provide 100% knowledge to your students to work in their field with full confidence and excellence.

We are interested in joining our hands with your esteemed institution and to educate software oriented courses for your students from various academic disciplines. So we kindly request you to provide us with an opportunity to implement SOFTWARE related curriculum for your students.

We are well equipped to conduct in-campus training classes for your students to your convenient schedule.

Looking forward to your favorable reply

Thanking you Sir.

Yours truly,
For GLOBAL CADD TECHNOLOGY,

(S.SIVARAJ)
MANAGING PARTNER

Principal,
Knowledge Institute of Technology
Kakapalayam (Po), Salem-637 504

GLOBAL
CADD TECHNOLOGY

2/38, First Floor, Kalaimagal Street,
Swarnapuri, Salem - 636 004.
■ 0427-4042435 ■ 84288 86528
■ e-mail: globalcaddtechnology@gmail.com
■ Web: www.globalcaddtech.com

COMPANY PROFILE

We are happy to introduce ourselves as professionals experienced from various backgrounds such as Educational sector, Industrial R&D (Research & Development), Industrial service sector and Industrial technical sector.

The "**M/s.Global Cadd Technology**" institution was established in the year 2008 for the purpose of providing good software education in design field in a cost effective manner.
We as a team and based on our experience are aware of the fact what the industrial and professional sector requires from a fresher. We impart those qualities in our students to take a good career path.

Now we have expanded our operation by becoming franchisee of
"M/S. CADD TECHNOLOGIES SCHOOL OF DESIGN PVT LTD" who is the pioneer in CADD training field as a authorized training partner for AUTODESK and PTC UNIVERSITY.

CADD TECHNOLOGIES SCHOOL OF DESIGN PVT LTD as a company is always committed for quality training in updated technology which will serve the student community in terms of industry requirement, self fulfillment, and industry solutions for which it has framed an advisory committee which includes people from the industry, leading educational institutions and well wishers who are backing us to strengthen our presence in the market.

"M/S.MATCOM SYSTEMS ", the sister concern of **"M/S. CADD TECHNOLOGIES SCHOOL OF DESIGN PVT LTD"** is the pioneer in the field of technical computing solutions. They provide solutions for the industries, researchers and academicians through the MATLAB, Arduino based Embedded system design, LabVIEW, OrCAD, VLSI design tools and other software tools in terms of Signal Analysis and Processing, Data Processing, Image and Video Processing based applications.

Principal,
Knowledge Institute of Technology
Kakapalayam (Po), Salem-637 504

Empowering Cadd Talents

GLOBAL
CADD TECHNOLOGY

2/38, First Floor, Kalaimagal Street,
Swarnapuri, Salem - 636 004.
■ 0427-4042435 ■ 84288 86528
■ e-mail: globalcaddtechnology@gmail.com
■ Web: www.globalcaddtech.com

Our other franchisee partner

"M/S.KALVI HIGHER EDUCATION AND RESEARCH INSTITUTE", is one of the foremost Computer Education Institute in India.

Kalvi Institute in the field of training for Information Technology people Offers International Certification like **IBM, Microsoft, Adobe, Corel, Oracle, Tally, AutoDesk, HP, Cisco, C,C++ Institute, Linux,CompTIA, Toefl, GRE, Intel.**

In this competitive field many such institutions take this service in a commercial manner and their training is only in the software level. This training may not be sufficient for a student to prove his capability in entry level of top companies. We have specialized and customized training, tailored to meet specific industrial requirements.

Principal,
Knowledge Institute of Technology
Kakapalayam (Po), Salem-637 504

KNOWLEDGE INSTITUTE OF TECHNOLOGY, SALEM-637 504
Department of Electrical and Electronics Engineering
Certification Course – Lesson Plan Schedule

Name of the Course:	Electrical wiring circuit design using Electrical CAD		
Academic Year:	2018-2019		
Year/Sem:	II / IV	**Date:**	28.12.18 to 12.1.19

Day	Session Timing	Course Content
1.	3.30pm to 7 pm	• Introduction to CAD/CAM/CAE
2.	3.30pm to 7 pm	• Introduction to Electrical CAD • Basic setup, coordinate System
3.	3.30pm to 7 pm	• Line, XLine, Rectangle, Copy, Offset • Polygen, Array, Move, Rotate
4.	3.30pm to 7 pm	• Mirror, Erase, Arc, Circles, Trim • Extend, Scale, Stretch
5.	3.30pm to 7 pm	**Drawing Practice:** • Ellipse, Spline, Point, Donut, Extend, Break • Fillet, Chamfer, Explode, Divide
6.	3.30pm to 7 pm	**Drawing Practice:** • Object Selection Method • Drafting Settings, Properties, Match Properties, Block, Wblock
7.	3.30pm to 7 pm	**Drawing Practice:** • Hatch, Display, Order, Single line text • Multi line text, Table, Boundary, Region
8.	3.30pm to 7 pm	**Drawing Practice:** • Parametric Modeling & Dimensioning
9.	3.30pm to 7 pm	**Drawing Test:** • Inserting Schematic Components, Symbols, Components from list

Principal,
Knowledge Institute of Technology
Kakapalayam (Po), Salem-637 504

10.	3.30pm to 7 pm	**Drawing Test:** • Connectors, Terminals, Multi-Level Terminals
11.	3.30pm to 7 pm	**Circuit Design Practice:** • Jumpers, Basic Utilities, Copying Catalogue and Location Values
12.	3.30pm to 7 pm	**Circuit Design Practice** • Swapping and Updation Blocks, Using the Auditing tools
13.	3.30pm to 7 pm	• Evaluation Test
14.	3.30pm to 7 pm	• Feedback and Valedictory

Certification Course Schedule - Resource Person Schedule

Total Days	Timings	Resource Person	Venue
14	AN- 3.30-7.00	**Global CADD Technology** 38, Kalaimagal St, Alagapuram Pudur, Salem, Tamil Nadu 636004	E-Block 3rd Floor- MTLC & CC9 lab

B. Sandhiya 24/12/18

CC Coordinator

HoD/EEE

Principal,
Knowledge Institute of Technology
Kakapalayam (Po), Salem-637 504

KNOWLEDGE INSTITUTE OF TECHNOLOGY

Department of Electrical and Electronics Engineering

Certification Course

Students Attendence

Academic Year: 2018-19 **Year/Sem:** II/III

Name of the Course: Electrical wiring circuit design using Electrical CAD **Timing:** 3.30pm to 7.00pm

S.No	Register No	Name of the Student	28.12.18	29.12.18	31.12.18	1.01.19	2.01.19	3.01.19	4.01.19	05.01.19	07.01.19	08.01.19	09.01.19	10.01.19	11.01.19	12.01.19
1	611217105001	AAFREEN S	P	P	P	P	P	P	P	P	P	A	P	P	P	P
2	611217105002	AARTHI B	P	P	P	P	P	P	P	P	A	P	P	P	P	P
3	611217105003	ABARANJI S	P	P	P	P	P	P	P	P	P	P	P	A	P	P
4	611217105006	ABITH HUSSAIN M	P	P	P	P	A	P	P	P	P	P	P	P	P	P
5	611217105007	AHAMAD AKTHUS S	P	P	A	P	P	P	P	P	P	P	P	P	P	P
6	611217105008	AJITH KUMAR V	P	P	P	P	P	P	P	P	P	P	P	P	P	P
7	611217105009	ANANTHAPOOJA A	P	P	P	P	P	A	P	P	P	P	A	P	P	P
8	611217105010	BARANI P	P	P	P	P	P	P	P	P	P	P	P	P	P	P
9	611217105011	BHAVITHRA S	P	A	P	P	P	P	P	P	P	P	P	P	P	P
10	611217105012	BHUVANES C	P	P	P	P	P	P	A	P	P	P	P	P	P	A
11	611217105013	CIBIAAKASH M	P	P	P	A	P	P	P	P	P	P	P	P	P	P
12	611217105016	DEEBIKA S	P	P	P	P	P	P	P	P	P	P	P	P	P	P
13	611217105017	DEEPAK R V	P	P	P	P	P	A	P	P	P	P	P	P	P	P
14	611217105019	DHARSHINI K M	P	P	A	P	P	P	P	A	A	P	P	P	P	P
15	611217105020	DHILIP A	P	P	P	P	P	P	P	P	P	P	P	P	A	P
16	611217105021	DINESH KANNA S	P	P	P	P	A	P	P	P	P	P	P	P	P	P
17	611217105025	ESNEYA N	A	P	P	P	P	P	P	P	P	P	P	P	P	P
18	611217105026	GHOURI K	P	P	P	P	P	P	P	P	P	P	P	P	P	P
19	611217105027	GOBINATH L	P	P	P	P	P	P	P	P	P	P	P	P	P	P
20	611217105028	GOKUL RAJ G	P	P	P	P	P	P	P	P	P	P	P	P	P	P
21	611217105030	GOWRI SHANKAR U	P	P	P	P	P	P	P	P	P	P	P	P	P	P
22	611217105031	GOWSIKA J	P	P	P	P	P	P	P	P	P	P	P	P	P	P
23	611217105032	GUNASEKARAN V	P	P	P	A	P	P	P	P	P	P	P	P	P	P
24	611217105034	HEMALATHA V	P	P	P	P	P	P	P	P	A	P	P	P	P	P
25	611217105036	JAGADEESH M	P	P	P	P	P	P	P	P	P	P	P	P	P	P
26	611217105037	JEEVA KP	P	P	P	P	P	P	P	P	P	P	P	P	P	P
27	611217105038	JEEVAPRIYA M	P	A	P	P	P	P	P	P	P	P	P	P	P	P
28	611217105039	JEEVA SUDHAN K	P	P	P	P	P	P	P	P	P	P	P	P	A	P
29	611217105040	KAARTHICK M	P	P	P	P	A	P	P	P	P	P	P	A	P	P
30	611217105042	KARTHICK S	P	P	P	P	P	P	A	P	P	P	A	P	P	P
31	611217105043	KAVIN KUMAR S	P	P	P	P	P	P	P	P	P	P	P	P	P	P
32	611217105044	KAVIPRIYA S	P	P	P	P	P	P	P	P	P	P	P	P	P	P
33	611217105046	KEERTHANA S	P	P	A	P	P	P	P	P	P	P	P	P	P	P
34	611217105047	KEERTHIKA S	P	P	P	P	P	P	P	P	P	A	P	P	P	P
35	611217105050	KOWSALYA A	P	P	P	P	P	A	P	P	P	P	P	P	P	P
36	611217105053	LAKSHMI SARASWATHI M	A	P	P	P	P	P	P	P	P	P	P	P	P	P
37	611217105054	MADHANMOHAN V	P	P	P	A	P	P	P	P	P	P	P	P	P	P
38	611217105056	MAHILAN R	P	P	P	P	P	P	P	P	P	P	P	A	P	P
39	611217105057	MANI R	P	P	P	P	P	P	P	A	P	P	P	P	P	P
40	611217105058	MANJULA B N	P	P	P	P	P	P	P	P	P	P	P	P	P	P
41	611217105062	MOHAMED ARSHATH M	P	P	P	P	P	P	P	P	P	P	P	P	P	A

Principal,
Knowledge Institute of Technology
Kakapalayam (Po), Salem-637 504

S.No	Register No	Name of the Student	28.12.18	29.12.18	31.12.18	1.01.19	2.01.19	3.01.19	4.01.19	05.01.19	07.01.19	08.01.19	09.01.19	10.01.19	11.01.19	12.01.19
42	611217105063	MOHAMMED IFRAN S	/	a	/	/	/	/	a	/	/	/	/	/	/	/
43	611217105066	NANDHINI S	/	/	/	/	/	/	/	/	/	/	/	a	/	/
44	611217105069	NAVEEN PRASANTH G	/	/	/	/	/	/	/	/	/	/	/	/	/	/
45	611217105070	NAVEEN SURYA S	/	/	/	/	a	/	/	a	/	/	/	/	/	a
46	611217105071	NITHEESH KUMAR R	/	/	/	/	/	/	/	/	/	/	/	/	/	/
47	611217105074	NITHEESH KUMAR S T	/	/	/	/	/	/	/	/	/	/	/	/	/	/
48	611217105075	PADMANABAN P	/	/	/	a	/	/	/	/	/	/	/	/	/	/
49	611217105076	PAVITHRAN M	/	/	/	/	/	/	/	/	/	/	a	/	/	/
50	611217105079	PRAVEEN N	/	/	/	/	/	/	/	a	/	/	/	/	/	/
51	611217105080	PRIYADHARSAN P	/	/	/	/	/	a	/	/	a	/	/	/	/	/
52	611217105082	PRIYATHARINI I	/	/	/	/	/	/	/	/	/	/	/	/	/	/
53	611217105083	RAGAVI L	/	/	/	/	/	/	/	/	/	/	/	/	/	/
54	611217105085	RAGHUVINDER P S	/	/	/	/	/	/	/	/	/	/	/	a	/	a
55	611217105087	RAJKUMAR M	/	/	/	/	/	/	a	/	/	/	/	/	/	/
56	611217105089	RISHI KESAN D	/	/	/	/	/	/	/	/	/	/	/	/	/	/
57	611217105092	SARAVANADEVA C	/	/	/	/	/	/	/	/	/	/	/	/	/	/
58	611217105093	SASIKUMAR S	/	/	a	/	/	/	/	/	/	/	/	/	/	/
59	611217105095	SHANMUGA PRIYA S	/	/	/	/	/	a	/	/	/	/		/	/	/
60	611217105097	SIVARANJANI M	/	/	/	/	/	/	/	/	/	/	a	a	/	/
61	611217105099	SOUNTHAR A	/	/	/	/	/	/	/	/	/	/	/	/	/	/
62	611217105101	SRINITHI G P	/	/	/	/	/	/	/	/	a	/	/	/	/	/
63	611217105102	SUBHA SHREE B	/	/	/	/	/	/	/	/	/	/	/	/	/	/
64	611217105105	SURIYAPRAKASH D	a	/	/	/	/	/	/	/	/	/	/	/	/	/
65	611217105106	SURIYHA C	/	/	/	/	/	/	/	/	/	/	/	/	/	/
66	611217105107	SURYA PRAKASH V	/	/	/	a	/	/	/	/	/	/	/	/	/	/
67	611217105110	TAMILNITHI G	/	/	/	/	/	/	/	/	/	/	/	/	/	/
68	611217105112	VAISHNOW M	/	/	/	/	/	/	/	/	/	/	/	/	/	a
69	611217105113	VEEBEEN V	/	/	/	/	/	/	/	/	/	/	/	/	/	/
70	611217105116	VIGNESHWARI E	/	/	/	/	/	/	/	/	/	/	/	/	/	/
71	611217105117	VIJAYA BARATH G	/	/	/	/	/	/	/	/	/	/	/	/	/	/
72	611217105119	VIJITH P S	/	/	/	/	a	/	/	a	/	/	/	/	/	/
73	611217105122	YOKESHWARAN I	/	a	/	/	/	/	/	/	/	/	/	/	/	/
74	611217105302	ESWARAN M	/	/	/	/	/	/	/	/	/	/	/	/	/	/
75	611217105303	GUNASEKARAN A	/	/	/	/	/	/	/	/	/	/	a	/	/	/
76	611217105306	NANDHINI A	/	/	/	/	/	/	/	/	/	/	/	/	/	/
77	611217105307	NAVEEN KUMAR S	/	/	/	/	/	/	a	/	/	/	/	/	/	/
78	611217105309	VIGNESH A S	/	/	/	/	/	/	/	/	/	/	/	/	/	/
No of Students Present			75	74	74	73	73	73	73	73	74	76	73	73	76	73
No of Students Absent			3	4	4	5	5	5	5	5	4	2	5	5	2	5

B. Sandhi 13/1/19

CC Coordinator

HoD/EEE

Principal,
Knowledge Institute of Technology
Kakapalayam (Po), Salem-637 504.

KNOWLEDGE INSTITUTE OF TECHNOLOGY

Department of Electrical and Electronics Engineering

Certificate Course Evaluation Test Question Paper

Name of the Course:	Electrical wiring circuit design using Electrical CAD		
Academic Year:	2018-2019		
Year/Sem:	II / IV		
Name:	Shanmuga Priya S		
Reg No:	611217105095	**Date:**	12.01.19

Part A **(10x2=20)**

1. Define Cad?
2. What Is Cad System?
3. List the Elements Of Cad; (or) Various Phases Of Cad?
4. What Is Drawing Entities?
5. What Are The Editing Commands In Cad?
6. What Is Geometric Modeling?
7. List the Geometric Modeling Techniques?
8. Compare 2d Vs 3d?
9. What Are The Various 2d Transformations?
10. What Are The Advantages Of Solid Modeling?

Part B **(15X2=30)**

1. Draw the Electrical Symbols of Resistor, Capacitor, Inductor, Diode, TRIAC, DIAC, 1 phase Induction motor, Synchronous motor and Transformer in CAD Software.
2. Construct the circuit diagram of single phase Induction motor load test using CAD Software.

S.No	Particulars	Marks Allocated	Marks Awarded
1	Test	50	47
2	Viva- Voce	20	10
3	Assignments and Participation	30	21
	Total	**100**	78

Principal,
Knowledge Institute of Technology
Kakapalayam (Po), Salem-637 504

Evaluator Sign

KNOWLEDGE INSTITUTE OF TECHNOLOGY

Department of Electrical and Electronics Engineering

Certificate Course Evaluation Test Question Paper

Name of the Course:	Electrical wiring circuit design using Electrical CAD		
Academic Year:	2018-2019		
Year/Sem:	II / IV		
Name:	vignesh.A.S		
Reg No:	611217105091	**Date:**	12.01.19

Part A **(10x2=20)**

1. Define Cad?
2. What Is Cad System?
3. List the Elements Of Cad; (or) Various Phases Of Cad?
4. What Is Drawing Entities?
5. What Are The Editing Commands In Cad?
6. What Is Geometric Modeling?
7. List the Geometric Modeling Techniques?
8. Compare 2d Vs 3d?
9. What Are The Various 2d Transformations?
10. What Are The Advantages Of Solid Modeling?

Part B **(15X2=30)**

1. Draw the Electrical Symbols of Resistor, Capacitor, Inductor, Diode, TRIAC, DIAC, 1 phase Induction motor, Synchronous motor and Transformer in CAD Software.
2. Construct the circuit diagram of single phase Induction motor load test using CAD Software.

S.No	Particulars	Marks Allocated	Marks Awarded
1	Test	50	45
2	Viva- Voce	20	15
3	Assignments and Participation	30	25
	Total	**100**	85

Evaluator Sign

Principal,
Knowledge Institute of Technology
Kakapalayam (Po), Salem-637 504

KNOWLEDGE INSTITUTE OF TECHNOLOGY

Department of Electrical and Electronics Engineering

Certification Course Evaluation Mark Statement

Academic Year: 2018-19 **Year/Sem:** II/IV **Date:** 12/01/2019

Name of the Course: Electrical wiring circuit design using Electrical CAD

S.No	Register No	Name of the Student	Mark Secured (100)	STATUS
1	611217105001	AAFREEN S	85	Certified
2	611217105002	AARTHI B	78	Certified
3	611217105003	ABARANJI S	85	Certified
4	611217105006	ABITH HUSSAIN M	78	Certified
5	611217105007	AHAMAD AKTHUS S	91	Certified
6	611217105008	AJITH KUMAR V	86	Certified
7	611217105009	ANANTHAPOOJA A	84	Certified
8	611217105010	BARANI P	72	Certified
9	611217105011	BHAVITHRA S	90	Certified
10	611217105012	BHUVANES C	84	Certified
11	611217105013	CIBIAAKASH M	96	Certified
12	611217105016	DEEBIKA S	97	Certified
13	611217105017	DEEPAK R V	85	Certified
14	611217105019	DHARSHINI K M	70	Certified
15	611217105020	DHILIP A	75	Certified
16	611217105021	DINESH KANNA S	96	Certified
17	611217105025	ESNEYA N	97	Certified
18	611217105026	GHOURI K	91	Certified
19	611217105027	GOBINATH L	86	Certified
20	611217105028	GOKUL RAJ G	88	Certified
21	611217105030	GOWRI SHANKAR U	72	Certified
22	611217105031	GOWSIKA J	90	Certified
23	611217105032	GUNASEKARAN V	84	Certified
24	611217105034	HEMALATHA V	96	Certified
25	611217105036	JAGADEESH M	96	Certified
26	611217105037	JEEVA KP	85	Certified
27	611217105038	JEEVAPRIYA M	70	Certified
28	611217105039	JEEVA SUDHAN K	75	Certified
29	611217105040	KAARTHICK M	96	Certified
30	611217105042	KARTHICK S	72	Certified
31	611217105043	KAVIN KUMAR S	85	Certified
32	611217105044	KAVIPRIYA S	78	Certified
33	611217105046	KEERTHANA S	85	Certified
34	611217105047	KEERTHIKA S	80	Certified
35	611217105050	KOWSALYA A	91	Certified
36	611217105053	LAKSHMI SARASWATHI M	86	Certified
37	611217105054	MADHANMOHAN V	84	Certified
38	611217105056	MAHILAN R	94	Certified
39	611217105057	MANI R	90	Certified

Principal,
Knowledge Institute of Technology
Kakapalayam (Po), Salem-637 50

S.No	Register No	Name of the Student	Mark Secured (100)	STATUS
40	611217105058	MANJULA B N	85	Certified
41	611217105062	MOHAMED ARSHATH M	78	Certified
42	611217105063	MOHAMMED IFRAN S	85	Certified
43	611217105066	NANDHINI S	78	Certified
44	611217105069	NAVEEN PRASANTH G	91	Certified
45	611217105070	NAVEEN SURYA S	86	Certified
46	611217105071	NITHEESH KUMAR R	84	Certified
47	611217105074	NITHEESH KUMAR S T	76	Certified
48	611217105075	PADMANABAN P	90	Certified
49	611217105076	PAVITHRAN M	84	Certified
50	611217105079	PRAVEEN N	96	Certified
51	611217105080	PRIYADHARSAN P	97	Certified
52	611217105082	PRIYATHARINI I	85	Certified
53	611217105083	RAGAVI L	70	Certified
54	611217105085	RAGHUVINDER P S	75	Certified
55	611217105087	RAJKUMAR M	82	Certified
56	611217105089	RISHI KESAN D	80	Certified
57	611217105092	SARAVANADEVA C	90	Certified
58	611217105093	SASIKUMAR S	86	Certified
59	611217105095	SHANMUGA PRIYA S	78	Certified
60	611217105097	SIVARANJANI M	91	Certified
61	611217105099	SOUNTHAR A	86	Certified
62	611217105101	SRINITHI G P	84	Certified
63	611217105102	SUBHA SHREE B	96	Certified
64	611217105105	SURIYAPRAKASH D	85	Certified
65	611217105106	SURIYHA C	70	Certified
66	611217105107	SURYA PRAKASH.V	75	Certified
67	611217105110	TAMILNITHI G	96	Certified
68	611217105112	VAISHNOW M	72	Certified
69	611217105113	VEEBEEN V	85	Certified
70	611217105116	VIGNESHWARI E	78	Certified
71	611217105117	VIJAYA BARATH G	85	Certified
72	611217105119	VIJITH P S	80	Certified
73	611217105122	YOKESHWARAN I	91	Certified
74	611217105302	ESWARAN M	86	Certified
75	611217105303	GUNASEKARAN A	84	Certified
76	611217105306	NANDHINI A	94	Certified
77	611217105307	NAVEEN KUMAR S	90	Certified
78	611217105309	VIGNESH A S	85	Certified

CC Coordinator

HoD/EEE

Principal,
Knowledge Institute of Technology
Kakapalayam (Po), Salem-637 504.

KNOWLEDGE INSTITUTE OF TECHNOLOGY

Department of Electrical and Electronics Engineering

Mark Evaluation Analysis Report

Name of the Course:	Electrical wiring circuit design using Electrical CAD		
Academic Year:	2018-2019		
Year/Sem:	II / IV	**Date:**	28.12.18 to 12.1.19

Total No of Students Enrolled: 78

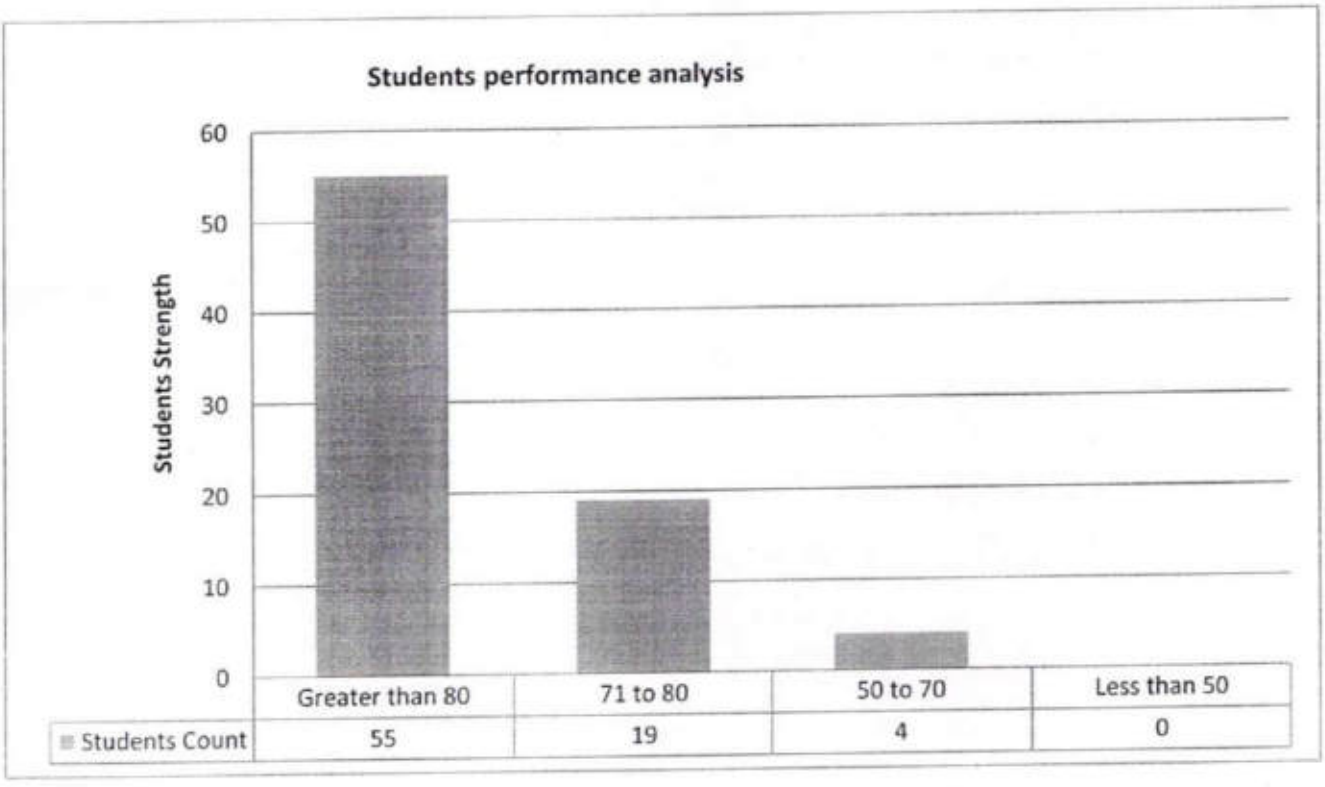

13/1/19

CC Coordinator

HoD/EEE

Principal,
Knowledge Institute of Technology
Kakapalayam (Po), Salem-6

CERTIFICATION COURSE

KNOWLEDGE INSTITUTE OF TECHNOLOGY

(Approved by AICTE, New Delhi and Affiliated to Anna University, Chennai (Accredited by NAAC))

NH - 47, KIOT COMPUS, KAKAPALAYAM, SALEM – 637 504.

Beyond Knowledge

GLOBAL
CADD TECHNOLOGY

DEPARTMENT OF ELECTRICAL AND ELECTRONICS ENGINEERING

CERTIFICATE OF COMPLETION

This is to certify that Mr. / ~~Ms.~~ MAHILAN . R - II - EEE

Reg. No. 611217105056 *of knowledge institute of technology, salem has Successfully completed the certificate course on* ***"Electrical wiring circuit design using Electrical CAD"*** *conducted by* ***Global CADD Technology*** *from* ***28.12.2018 to 12.1.2019.***

COORDINATOR	HOD	VICE PRINCIPAL	PRINCIPAL
Mr.S.Sivaraj	Dr.C.Muniraj	Dr. K. Visagavel	Dr. PSS. Srinivasan
GLOBAL CADD TECHNOLOGY	Professor & Head / EEE KIOT	KIOT	KIOT

Principal,
Knowledge Institute of Technology
Kakapalayam (Po), Salem-637 5

CERTIFICATION COURSE

KNOWLEDGE INSTITUTE OF TECHNOLOGY

(Approved by AICTE, New Delhi and Affiliated to Anna University, Chennai (Accredited by NAAC))

NH - 47, KIOT COMPUS, KAKAPALAYAM, SALEM – 637 504.

Beyond Knowledge

GLOBAL
CADD TECHNOLOGY

DEPARTMENT OF ELECTRICAL AND ELECTRONICS ENGINEERING

CERTIFICATE OF COMPLETION

This is to certify that Mr. / ~~Ms.~~ MANI.R - II - EEE

Reg. No. 611217105057 *of knowledge institute of technology, salem has Successfully completed the certificate course on* ***"Electrical wiring circuit design using Electrical CAD"*** *conducted by Global CADD Technology from* ***28.12.2018 to 12.1.2019.***

COORDINATOR
Mr.S.Sivaraj
GLOBAL CADD TECHNOLOGY

HOD
Dr.C.Muniraj
Professor & Head / EEE KIOT

VICE PRINCIPAL
Dr. K. Visagavel
KIOT

Principal,
Knowledge Institute of Technology
Kakapalayam (Po), Salem-637 504

PRINCIPAL
Dr. PSS. Srinivasan
KIOT

CERTIFICATION COURSE

KNOWLEDGE INSTITUTE OF TECHNOLOGY

(Approved by AICTE, New Delhi and Affiliated to Anna University, Chennai (Accredited by NAAC))

NH - 47, KIOT COMPUS, KAKAPALAYAM, SALEM – 637 504.

Beyond Knowledge

GLOBAL
CADD TECHNOLOGY

DEPARTMENT OF ELECTRICAL AND ELECTRONICS ENGINEERING

CERTIFICATE OF COMPLETION

This is to certify that ~~Mr.~~ / Ms. KAVIPRIYA . S - II - EEE

Reg. No. 611217105044 *of knowledge institute of technology, salem has Successfully completed the certificate course on* ***"Electrical wiring circuit design using Electrical CAD"*** *conducted by* ***Global CADD Technology*** *from* ***28.12.2018 to 12.1.2019.***

COORDINATOR	HOD	VICE PRINCIPAL	PRINCIPAL
Mr.S.Sivaraj	Dr.C.Muniraj	Dr. K. Visagavel	Dr. PSS. Srinivasan
GLOBAL CADD TECHNOLOGY	Professor & Head / EEE KIOT	KIOT	KIOT

Principal,
Knowledge Institute of Technology
Kakapalayam (Po), Salem-637

CERTIFICATION COURSE

KNOWLEDGE INSTITUTE OF TECHNOLOGY

(Approved by AICTE, New Delhi and Affiliated to Anna University, Chennai (Accredited by NAAC))

NH - 47, KIOT COMPUS, KAKAPALAYAM, SALEM – 637 504.

Beyond Knowledge

GLOBAL
CADD TECHNOLOGY

DEPARTMENT OF ELECTRICAL AND ELECTRONICS ENGINEERING

CERTIFICATE OF COMPLETION

This is to certify that Mr. / ~~Ms.~~ PHILIP . A - II - EEE

Reg. No. 611217105020 *of knowledge institute of technology, salem has Successfully completed the certificate course on* ***"Electrical wiring circuit design using Electrical CAD"*** *conducted by Global CADD Technology from* ***28.12.2018 to 12.1.2019.***

COORDINATOR
Mr.S.Sivaraj
GLOBAL CADD TECHNOLOGY

HOD
Dr.C.Muniraj
Professor & Head / EEE KIOT

VICE PRINCIPAL
Dr. K. Visagavel
KIOT

Principal,
Knowledge Institute of Technology
Kakapalayam (Po), Salem-637 504

PRINCIPAL
Dr. PSS. Srinivasan
KIOT

CERTIFICATION COURSE

KNOWLEDGE INSTITUTE OF TECHNOLOGY

(Approved by AICTE, New Delhi and Affiliated to Anna University, Chennai (Accredited by NAAC))

NH - 47, KIOT COMPUS, KAKAPALAYAM, SALEM – 637 504.

Beyond Knowledge

GLOBAL
CADD TECHNOLOGY

DEPARTMENT OF ELECTRICAL AND ELECTRONICS ENGINEERING

CERTIFICATE OF COMPLETION

This is to certify that ~~Mr.~~ / Ms. AAFREEN .S - II · EEE

Reg. No. 611217105001 *of knowledge institute of technology, salem has Successfully completed the certificate course on* ***"Electrical wiring circuit design using Electrical CAD"*** *conducted by* ***Global CADD Technology*** *from* ***28.12.2018 to 12.1.2019.***

COORDINATOR
Mr.S.Sivaraj
GLOBAL CADD TECHNOLOGY

HOD
Dr.C.Muniraj
Professor & Head / EEE KIOT

VICE PRINCIPAL
Dr. K. Visagavel
KIOT

PRINCIPAL
Dr. PSS. Srinivasan
KIOT

Principal,
Knowledge Institute of Technology
Kakapalayam (Po), Salem-637 504

KNOWLEDGE INSTITUTE OF TECHNOLOGY, SALEM.

DEPARTMENT OF ELECTRICAL AND ELECTRONICS ENGINEERING

FEEDBACK FORM

Type of Course: Certificate / Value Added / Vocational Educational Training

Name of the Student: Aarthi .B

Course Title: Electrical wiring circuit design using Electrical CAD

Year/ Sem: II / IV

Dept : EEE

Date: 24/12/18

Parameters	Please Tick mark on the appropriate box				
	Excellent (5)	Good (4)	Satisfactory (3)	Poor (2)	Very Poor (1)
Resource person knowledge on the Course		✓			
Course Delivery			✓		
Practical Experience	✓				
Additional resources available			✓		
Overall rating about lecture and Training		✓			

Positive points about the Lecture:

*) Very useful lecture

*) Interesting to design

Suggestions for improvement:

*) Need more practice

B. Aarthi

(Signature of the student)

Principal
Knowledge Institute of Technology
Kakapalayam (Po), Salem-637 504

KNOWLEDGE INSTITUTE OF TECHNOLOGY, SALEM.

DEPARTMENT OF ELECTRICAL AND ELECTRONICS ENGINEERING

FEEDBACK FORM

Type of Course: Certificate / Value Added / Vocational Educational Training

Name of the Student: Keerthana.S

Course Title: Electrical wiring circuit design using Electrical CAD

Year/ Sem: II / IV

Dept : EEE

Date: 24/12/18

Parameters	Please Tick mark on the appropriate box				
	Excellent (5)	Good (4)	Satisfactory (3)	Poor (2)	Very Poor (1)
Resource person knowledge on the Course		✓			
Course Delivery			✓		
Practical Experience		✓			
Additional resources available	✓				
Overall rating about lecture and Training			✓		

Positive points about the Lecture:

*) Lecture is good.

*) very interesting to learn

Suggestions for improvement:

*) Need some more classes

Keerthana.

(Signature of the student)

Principal,
Knowledge Institute of Technology
Kakapalayam (Po), Salem-637 504

KNOWLEDGE INSTITUTE OF TECHNOLOGY, SALEM.

DEPARTMENT OF ELECTRICAL AND ELECTRONICS ENGINEERING

FEEDBACK FORM

Type of Course: ✓ Certificate / Value Added / Vocational Educational Training

Name of the Student: Jeeva K.P

Course Title: Electrical wiring circuit design using Electrical CAD

Year/ Sem: III / V

Dept : EEE

Date: 24/12/18

Parameters	Please Tick mark on the appropriate box				
	Excellent (5)	Good (4)	Satisfactory (3)	Poor (2)	Very Poor (1)
Resource person knowledge on the Course	✓				
Course Delivery			✓		
Practical Experience		✓			
Additional resources available			✓		
Overall rating about lecture and Training	✓		✓		

Positive points about the Lecture:

*) Learned something apart from academics

*) easy to understand

Suggestions for improvement:

*) Need more examples

Jeeva K.P

(Signature of the student)

Principal,
Knowledge Institute of Technolo
Kakapalayam (Po), Salem-637

KNOWLEDGE INSTITUTE OF TECHNOLOGY

Department of Electrical and Electronics Engineering

Feedback Analysis Report

Name of the Course:	Electrical wiring circuit design using Electrical CAD		
Academic Year:	2018-2019		
Year/Sem:	II / IV	**Date:**	28.12.18 to 12.1.19

Total No of Students Enrolled: 78

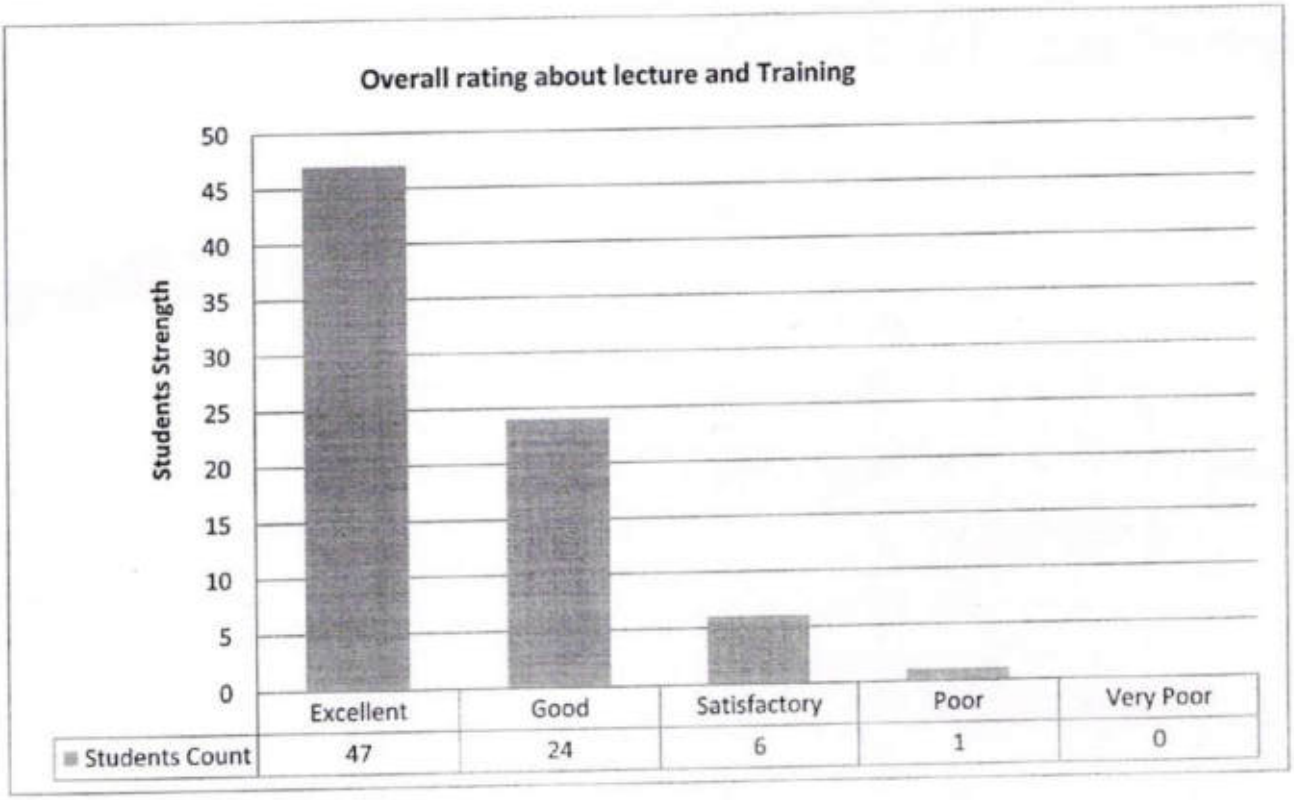

B. Saravanan 12/1/19

CC Coordinator

HoD/EEE

Principal,
Knowledge Institute of Technology
Kakapalayam (Po), Salem-637 50

KNOWLEDGE INSTITUTE OF TECHNOLOGY, SALEM – 637 504

Department of Computer Science and Engineering

REPORT OF THE EVENT

Date	12.06.2018 - 15.06.2018	**Resource person**	Prof. P.Sachidhanandam, Assistant Professor,CSE, KIOT
Time	9.00am – 5.00pm	**Title**	Problem Solving and Computer Programming using E-Box (Module I)
Venue	CC7 & CC8	**No. of Participants**	**270**

The Course Outcome are:

- Develop a Computer program for given problem
- Control the sequence of the program and give logical outputs
- Implement the strings in computer program
- Store different data types in the same memory
- Manage I/O operations in computer program
- Repeat the sequence of instructions and points for a memory location
- Apply code reusability with functions and pointers
- Understood the basics of file handling mechanisms
- Understood the uses of pre-processors and various memory models

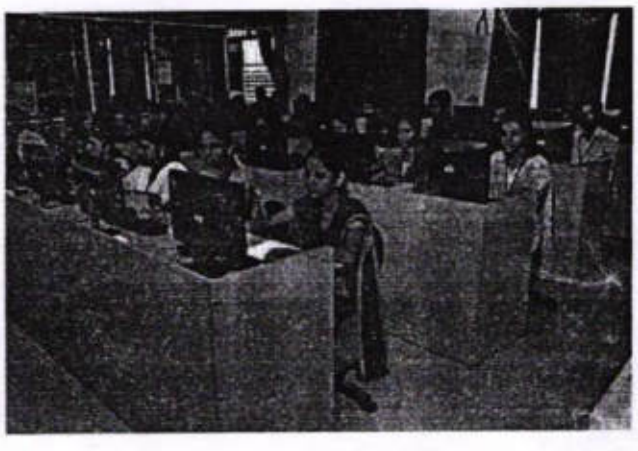

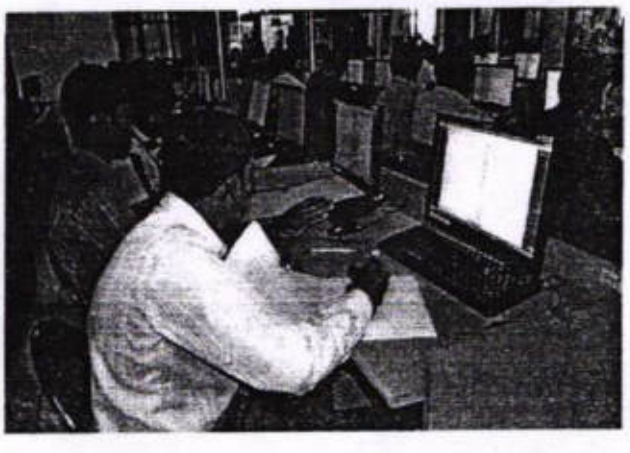

Encl: Circular / Brochure / Attendance Sheet

Principal,
Knowledge Institute of Technology
Kakapalayam (Po), Salem-637 504

KNOWLEDGE INSTITUTE OF TECHNOLOGY

(Approved by AICTE, New Delhi & Affiliated to Anna University, Chennai)

Problem Solving and Computer Programming using E-Box (Module I)

Course Syllabus

Fundamentals in Computer Programming

- ✓ ASimple Program
- ✓ Program execution phases
- ✓ Backslash character constants
- ✓ Character set
- ✓ Constants
- ✓ Number systems
- ✓ Format specifiers
- ✓ Identifiers, Keywords
- ✓ Variables, Data Types
- ✓ Declaration of Variable
- ✓ Assigning Values to Variables
- ✓ Initialization, Comments
- ✓ Const Qualifier
- ✓ Basic Structure of a 'C' program
- ✓ Programming Examples

Operators and Expressions

- ✓ Arithmetic operators
- ✓ Increment and decrement operators
- ✓ Relational operators
- ✓ Logical operators
- ✓ The bitwise operators
- ✓ The assignment operators
- ✓ The conditional operator
- ✓ The size of operator
- ✓ The comma operator

Data types

- ✓ Modifiers
- ✓ Format specifiers
- ✓ Dealing with each data types
- ✓ Memory representation of each type
- ✓ Control statements
- ✓ Conditional Control Statements
- ✓ If, if-else, nested if-else
- ✓ else-if ladder
- ✓ Multiple Branching Control Statement
- ✓ switch-case

Function

- ✓ What is function?
- ✓ Why function?
- ✓ Advantages of using functions
- ✓ Function Prototype
- ✓ Defining a function
- ✓ Calling afunction
- ✓ Return statement, Types of functions

Pointer

- ✓ Def of Pointer
- ✓ Declaration of Pointer Variables
- ✓ Assigning Address to Pointer Variables
- ✓ De-referencing Pointer Variables
- ✓ Pointer to Pointer
- ✓ Pointer Arithmetic, Pointer comparisons
- ✓ De-reference and increment pointer
- ✓ pointer to const data, const pointer
- ✓ const pointer to const data
- ✓ Void pointer or Generic Pointer
- ✓ Null pointer

Pointer and Function

- ✓ Parameter Passing Techniques call by value, call by address
- ✓ Using Pointers as Arguments Function Returning value
- ✓ Returning More than one value From A Function
- ✓ Functions Returning Address
- ✓ Function Returning Pointers
- ✓ Dangling pointer

Pointer to a Function

- ✓ Calling A function through function pointer
- ✓ passing A function's address as an Argument to other function
- ✓ Functions with variable number of arguments

Principal,
Knowledge Institute of Technology
Kakapalayam (Po), Salem-637 504

01.06.2018
Salem

From

Prof.R.Saranya,
Assistant Professor,
Department of Computer Science and Engineering
Knowledge Institute of Technology,
Salem- 637 504.

To

The Principal,
Knowledge Institute of Technology,
Salem- 637504.

Through,
Head of the Department/CSE

Respected Sir,

Subject: Requisition for Conducting Certification Course-Reg.

We have planned to conduct certification course on "Problem Solving and Computer Programming using E-Box (Module I)" from 12.06.2018 - 15.06.2018 for a period of 04 days with the duration of 32 hours. This course will be helpful for the skill development and placement of our II year students. In this regard, we request you to endowment as permission to conduct the course.

The course details are as follows:

SL. NO.	NAME OF THE PROGRAM	VENUE DATE & TIME	RESOURCE PERSON
1	Certificate Course on Problem Solving and Computer Programming using E-Box (Module I)	CC7, CC8 12.06.2018 to 15.06.2018 9.00am – 5.00pm	**Prof . P.Sachidhanandam** Assistant Professor, Department of Computer Science and Engineering

Thank you,

Yours truly,

1/6/18

01/06/18

HOD/CSE

PRINCIPAL

Principal,
Knowledge Institute of Technology
Kakapalayam (Po), Salem-637 504

KNOWLEDGE INSTITUTE OF TECHNOLOGY, SALEM - 637 504			
CIRCULAR			
Circular No.	2018/CC/ODD/01	**Date**	**04.06.2018**
To	All II Year Students		
Subject	Certificate Course on Problem Solving and Computer Programming using E-Box (Module I)		
Circular issued by	Department of Computer Science and Engineering		

This is to inform you that Department of Computer Science and Engineering has planned to conduct a **CERTIFICATE COURSE** on **Problem Solving and Computer Programming using E-Box** (Module I) in association with Amphisoft for ALL the II year students. Interested students are requested to register their names to the course In-charge.

SL. NO.	NAME OF THE PROGRAM	VENUE DATE & TIME	RESOURCE PERSON
1	Certificate Course on Problem Solving and Computer Programming using E-Box (Module I)	CC7, CC8 12.06.2018 to 15.06.2018 9.00am – 5.00pm	**Prof . P.Sachidhanandam** Assistant Professor, Department of Computer Science and Engineering

Course Incharge: Prof. R.Saranya, Assistant Professor/CSE

HOD/CSE		PRINCIPAL

MECH	VP Office	CIVIL	EEE	ECE	CSE	S& H	PD	LIB	EMS	AO	Trans-port I/C	Hostel NB	Director/ Training	Director/ Placement	Residential Warden		College NB	Office/ File	Class Circula-tion	Security Office	KBS	Recep tion.
															LH	GH						
•	•	•	•	•	•								•	•				•	•			

Principal,
Knowledge Institute of Technology
Kakapalayam (Po), Salem-637 504

KNOWLEDGE INSITITE OF TECHNOLOGY,SALEM-637504

DEPARTMENT OF COMPUTER SCIENCE & ENGINEERING

Problem Solving and Computer Programming using E-Box (Module I)

12.06.2018 - 15.06.2018

Enrolled Student NameList

Sl.No	Year	Register Number	Student Name
1	II A	611217104001	AAKASH M C
2	II A	611217104003	AISHWARYA K
3	II A	611217104005	ANITHA R
4	II A	611217104007	BALAKRISHNAN C
5	II A	611217104008	BHARATHY KANNAN M R
6	II A	611217104009	BHAVANI S
7	II A	611217104011	DARSHANA A
8	II A	611217104013	DEEPA K
9	II A	611217104016	DHANUSEYA M
10	II A	611217104017	DHARANIDHARAN M
11	II A	611217104019	DHIKSHA M P
12	II A	611217104020	DHILEEP N
13	II A	611217104023	DINESHKUMAR S
14	II A	611217104024	DIWAGAR S
15	II A	611217104026	ELANGO A
16	II A	611217104028	GOKULA PRIYA V
17	II A	611217104029	GOKULRAJ P
18	II A	611217104030	GOKULRAJAN M
19	II A	611217104031	GOUTHAM P
20	II A	611217104032	GOWTHAM G
21	II A	611217104034	HARI PRASANTH M
22	II A	611217104036	JAGADEEP T
23	II A	611217104037	JANANI B (02.03.2000)
24	II A	611217104039	KARTHIK T S
25	II A	611217104040	KAVIN SARVESH A
26	II A	611217104043	MANISH T
27	II A	611217104044	MEENAAKUMARI P

Principal,
Knowledge Institute of Technology
Kakapalayam (Po), Salem-637 504

28	II A	611217104046	MITHILESH K S
29	II A	611217104048	MOHANAPRIYA K
30	II A	611217104049	MONIGA SAROJA E
31	II A	611217104051	MONISHKUMAR B
32	II A	611217104052	MURALI KRISHNAN M
33	II A	611217104054	NAGAPRIYA N
34	II A	611217104056	NAVEENA M
35	II A	611217104057	PADMAVEERASHREE L
36	II B	611217104060	POOJA C
37	II B	611217104066	PRAVEEN S
38	II B	611217104071	PRIYADHARSHNI A
39	II B	611217104072	PRIYADHARSHINI M
40	II B	611217104076	RAJAMANI G
41	II B	611217104078	RANJIT PRASATH S
42	II B	611217104079	ROOBAN KUMAR R
43	II B	611217104086	SANTHIYA G
44	II B	611217104088	SARAN S
45	II B	611217104090	SATHAPPAN M
46	II B	611217104094	SHWETHA S
47	II B	611217104099	SOUNDAR T
48	II B	611217104101	SOUNDHARYA S M
49	II B	611217104104	SOWNDHARYA S
50	II B	611217104106	SRI PAVISH U
51	II B	611217104108	SUBASH S
52	II B	611217104112	SURIYA M
53	II B	611217104113	SURYA GANESH H A
54	II B	611217104116	VAISHNAVIE R
55	II B	611217104118	VIGNESH J
56	II B	611217104120	VIJAY S
57	II B	611217104302	SRI VAIGUNTHA M

12/6/18
Faculty Incharge

Principal,
Knowledge Institute of Technology
Kakapalayam (Po), Salem-637 504

HOD

KNOWLEDGE INSITITE OF TECHNOLOGY,SALEM-637504

DEPARTMENT OF ELECTRICAL AND ELECTRONICS ENGINEERING

Problem Solving and Computer Programming using E-Box (Module I)

12.06.2018 - 15.06.2018 | Students Enrollment List

Sl.No	Year	Register Number	Student Name
1	III	611216105001	AJAY KUMAR K
2	III	611216105002	ASHOKRAJA M
3	III	611216105003	BABU C
4	III	611216105004	BHATHIRI NARAYANAN S
5	III	611216105005	BRUNTHA S
6	III	611216105006	CHANDRA PRAKASH D
7	III	611216105007	CIBI KRISHNAN K
8	III	611216105008	DHANVIN R
9	III	611216105009	DHEENADHAYAL B
10	III	611216105010	DURAIRAJ C
11	III	611216105011	ELAKIYA V
12	III	611216105012	ELAVARASAN K
13	III	611216105013	FRANCO SELVANATHAN J
14	III	611216105014	GOKULAPRIYA A
15	III	611216105015	GOWRI SHANKAR M
16	III	611216105016	GOWSALYA V
17	III	611216105017	GOWTHAM S
18	III	611216105018	HARI DHARANI S
19	III	611216105019	HARIHARAN G
20	III	611216105020	ILAMATHY R
21	III	611216105021	INFANT RAJ F
22	III	611216105022	ISWARYA V
23	III	611216105023	JANANI B
24	III	611216105024	JAYASURIYA R
25	III	611216105025	KAMALAPRIYA SIVAMOORTHY
26	III	611216105026	KANNAN R K
27	III	611216105027	KARTHIK RAJA S
28	III	611216105028	KEERTHIVASAN K
29	III	611216105029	KIRANRAJ K
30	III	611216105030	KRITHIGA A K
31	III	611216105031	LOGANATHAN G
32	III	611216105032	LOGAPRIYA S
33	III	611216105033	MAHESHKUMAR S
34	III	611216105034	MAHESWARI L
35	III	611216105035	MALLIKRISHNAN M
36	III	611216105036	MANOPRIYA K
37	III	611216105038	MOHANA PRIYA C
38	III	611216105039	MONICA S
39	III	611216105040	MONICA S L
40	III	611216105041	MONIGA L
41	III	611216105042	MUGESHRAJ R
42	III	611216105043	NANDHINI G
43	III	611216105044	NARMADHA R
44	III	611216105045	NAVEENVIGNESH R
45	III	611216105047	PAVITHRA K
46	III	611216105048	PIRUTHIKA S
47	III	611216105049	POONGODI A

PRINCIPAL
Knowledge Institute of Technology
Kakapalayam (PO) Salem - 637 504

Sl.No	Year	Register Number	Student Name
48	III	611216105050	POONKUILAN S
49	III	611216105051	POOVARASAN A
50	III	611216105052	PREETHA S
51	III	611216105053	PREETHI K A
52	III	611216105054	PRIYA DHARSHIKA M
53	III	611216105057	PUGALARASAN M
54	III	611216105058	RAHUL A N
55	III	611216105059	RAMYA S
56	III	611216105060	RAMYA PRIYANGAA S R
57	III	611216105061	RANJITH P
58	III	611216105063	SANGEETHA P R
59	III	611216105064	SARANRAJ S
60	III	611216105065	SATHISH R
61	III	611216105066	SHARMILA V
62	III	611216105067	SIVAKUMAR G
63	III	611216105068	SIVAKUMAR M
64	III	611216105069	SIVA PRAKASH S V
65	III	611216105070	SOUNDHARYADEVI G
66	III	611216105072	SRIPAVATHAARANI S
67	III	611216105073	SUTHARSANAN E
68	III	611216105074	SWETHA P
69	III	611216105075	SYED DAANISH M
70	III	611216105076	TAMILARASAN V
71	III	611216105077	THOGAI VADIVU V
72	III	611216105078	UDHAYA I
73	III	611216105079	VASHIFA S
74	III	611216105081	VIGNESH M
75	III	611216105082	VIGNESH S
76	III	611216105083	VIGNESHWARAN K
77	III	611216105084	VINOTHKUMAR A
78	III	611216105085	YAGESHWARAN S
79	III	611216105086	YUHANA SHERIN S
80	III	611216105087	YUVARANI N
81	III	611216105301	BABU SHANKAR S K
82	III	611216105303	BARGAVI M
83	III	611216105305	GOKULNATH K
84	III	611216105306	MADHANKUMAR J
85	III	611216105307	MANI SHANKAR M
86	III	611216105308	MOHANRAJ S
87	III	611216105309	NAVEENKUMAR R
88	III	611216105310	PRASANTH M
89	III	611216105313	RADHA K
90	III	611216105314	RAGUL S
91	III	611216105316	SANTHOSHKUMAR M
92	III	611216105319	THAMARAISELVAN R
93	III	611216105701	GUMUTHAA S
94	III	611216105702	RAVIKUMAR L

Dept. CC Coordinator

HOD/EEE

PRINCIPAL,
Knowledge Institute of Technology
...POT Salem - 6...

KNOWLEDGE INSITITE OF TECHNOLOGY,SALEM-637504

DEPARTMENT OF COMPUTER SCIENCE & ENGINEERING

Problem Solving and Computer Programming using E-Box (Module I)

SYLLABUS & SCHEDULE

Day	Session	Contents
DAY 1	FN	Fundamentals in Computer Programming, Identifiers, Keywords Variables, Data Types, Declaration of Variable
	AN	Operators and Expressions, Data types, Control statements Conditional Control Statements
DAY 2	FN	Function, Function Prototype, Defining a function, Calling a function
	AN	Recursion, Nested functions, main() function, Library Function, Local and global variables
DAY 3	FN	Pointer, Def of Pointer, Declaration of Pointer Variables, Assigning Address to Pointer Variables, De-referencing Pointer Variables
	AN	Pointer to Pointer, Pointer Arithmetic, Pointer comparisons, De-reference and increment pointer, pointer to const data, const pointer
DAY 4	FN	Pointer and Function, Parameter Passing Techniques call by value, call by address, Using Pointers as Arguments Function Returning value
	AN	Calling A function through function pointer, passing A function's address as an Argument to other function, Functions with variable number of arguments

1/6/18

Course Cordinator

01/06/18

HOD

Principal,
Knowledge Institute of Technology
Kakapalayam (Po), Salem-637 504

KNOWLEDGE INSITITE OF TECHNOLOGY,SALEM-637504

DEPARTMENT OF COMPUTER SCIENCE & ENGINEERING

Problem Solving and Computer Programming using E-Box (Module I)

12.06.2018 - 15.06.2018 | Course Attendance

Sl.No	Year	Register Number	Student Name	12.6.18	13.6.18	14.6.18	15.6.18
1	II A	611217104001	AAKASH M C	1	1	1	1
2	II A	611217104003	AISHWARYA K	1	1	1	1
3	II A	611217104005	ANITHA R	1	1	1	1
4	II A	611217104007	BALAKRISHNAN C	1	1	1	1
5	II A	611217104008	BHARATHY KANNAN M R	1	1	1	1
6	II A	611217104009	BHAVANI S	1	1	1	1
7	II A	611217104011	DARSHANA A	1	1	1	1
8	II A	611217104013	DEEPA K	1	1	1	1
9	II A	611217104016	DHANUSEYA M	1	1	1	1
10	II A	611217104017	DHARANIDHARAN M	1	1	1	1
11	II A	611217104019	DHIKSHA M P	1	1	1	1
12	II A	611217104020	DHILEEP N	1	1	1	1
13	II A	611217104023	DINESHKUMAR S	1	1	1	1
14	II A	611217104024	DIWAGAR S	1	1	1	1
15	II A	611217104026	ELANGO A	1	1	1	1
16	II A	611217104028	GOKULA PRIYA V	1	1	1	1
17	II A	611217104029	GOKULRAJ P	1	1	1	1
18	II A	611217104030	GOKULRAJAN M	1	1	1	1
19	II A	611217104031	GOUTHAM P	1	1	1	1
20	II A	611217104032	GOWTHAM G	1	1	1	1
21	II A	611217104034	HARI PRASANTH M	1	1	1	1
22	II A	611217104036	JAGADEEP T	1	1	1	1
23	II A	611217104037	JANANI B (02.03.2000)	1	1	1	1
24	II A	611217104039	KARTHIK T S	1	1	1	1
25	II A	611217104040	KAVIN SARVESH A	1	1	1	1
26	II A	611217104043	MANISH T	1	1	1	1
27	II A	611217104044	MEENAAKUMARI P	1	1	1	1
28	II A	611217104046	MITHILESH K S	1	1	1	1
29	II A	611217104048	MOHANAPRIYA K	1	1	1	1
30	II A	611217104049	MONIGA SAROJA E	1	1	1	1
31	II A	611217104051	MONISHKUMAR B	1	1	1	1
32	II A	611217104052	MURALI KRISHNAN M	1	1	1	1
33	II A	611217104054	NAGAPRIYA N	1	1	1	1
34	II A	611217104056	NAVEENA M	1	1	1	1
35	II A	611217104057	PADMAVEERASHREE L	1	1	1	1

Principal,
Knowledge Institute of Technology
Kakapalayam (Po), Salem-637 504

36	II B	611217104060	POOJA C	1	1	1	1
37	II B	611217104066	PRAVEEN S	1	1	1	1
38	II B	611217104071	PRIYADHARSHNI A	1	1	1	1
39	II B	611217104072	PRIYADHARSHINI M	1	1	1	1
40	II B	611217104076	RAJAMANI G	1	1	1	1
41	II B	611217104078	RANJIT PRASATH S	1	1	1	1
42	II B	611217104079	ROOBAN KUMAR R	1	1	1	1
43	II B	611217104086	SANTHIYA G	1	1	1	1
44	II B	611217104088	SARAN S	1	1	1	1
45	II B	611217104090	SATHAPPAN M	1	1	1	1
46	II B	611217104094	SHWETHA S	1	1	1	1
47	II B	611217104099	SOUNDAR T	1	1	1	1
48	II B	611217104101	SOUNDHARYA S M	1	1	1	1
49	II B	611217104104	SOWNDHARYA S	1	1	1	1
50	II B	611217104106	SRI PAVISH U	1	1	1	1
51	II B	611217104108	SUBASH S	1	1	1	1
52	II B	611217104112	SURIYA M	1	1	1	1
53	II B	611217104113	SURYA GANESH H A	1	1	1	1
54	II B	611217104116	VAISHNAVIE R	1	1	1	1
55	II B	611217104118	VIGNESH J	1	1	1	1
56	II B	611217104120	VIJAY S	1	1	1	1
57	II B	611217104302	SRI VAIGUNTHA M	1	1	1	1
			No. of Students Present	55	55	55	56
			No of Students Absent	02	02	02	01

18/6/18
Faculty Incharge

HOD

Principal,
Knowledge Institute of Technology
Kakapalayam (Po), Salem-637 504

KNOWLEDGE INSITITE OF TECHNOLOGY,SALEM-637504

DEPARTMENT OF ELECTRICAL AND ELECTRONICS ENGINEERING

Problem Solving and Computer Programming using E-Box (Module I)

12.06.2018 - 15.06.2018 | Course Attendance

Sl.No	Year	Register Number	Student Name	12.06.18	13.06.18	14.06.18	15.06.18
1	III	611216105001	AJAY KUMAR K	/	/	/	/
2	III	611216105002	ASHOKRAJA M	/	/	/	/
3	III	611216105003	BABU C	9	/	/	/
4	III	611216105004	BHATHIRI NARAYANAN S	/	/	/	/
5	III	611216105005	BRUNTHA S	/	/	9	/
6	III	611216105006	CHANDRA PRAKASH D	/	/	/	/
7	III	611216105007	CIBI KRISHNAN K	/	/	/	/
8	III	611216105008	DHANVIN R	/	/	/	/
9	III	611216105009	DHEENADHAYAL B	/	/	/	/
10	III	611216105010	DURAIRAJ C	/	/	/	/
11	III	611216105011	ELAKIYA V	/	/	/	/
12	III	611216105012	ELAVARASAN K	/	/	9	/
13	III	611216105013	FRANCO SELVANATHAN J	/	/	/	/
14	III	611216105014	GOKULAPRIYA A	/	/	/	/
15	III	611216105015	GOWRI SHANKAR M	/	/	/	/
16	III	611216105016	GOWSALYA V	/	/	/	/
17	III	611216105017	GOWTHAM S	/	/	/	9
18	III	611216105018	HARI DHARANI S	9	/	/	/
19	III	611216105019	HARIHARAN G	/	/	/	/
20	III	611216105020	ILAMATHY R	/	/	/	/
21	III	611216105021	INFANT RAJ F	/	/	/	/
22	III	611216105022	ISWARYA V	/	/	9	/
23	III	611216105023	JANANI B	/	/	/	/
24	III	611216105024	JAYASURIYA R	/	/	/	/
25	III	611216105025	KAMALAPRIYA SIVAMOORTHY	/	/	/	9
26	III	611216105026	KANNAN R K	/	/	/	/
27	III	611216105027	KARTHIK RAJA S	/	/	/	/
28	III	611216105028	KEERTHIVASAN K	9	/	/	/
29	III	611216105029	KIRANRAJ K	/	/	/	/
30	III	611216105030	KRITHIGA A K	/	/	/	/
31	III	611216105031	LOGANATHAN G	/	/	/	/
32	III	611216105032	LOGAPRIYA S	/	/	/	/
33	III	611216105033	MAHESHKUMAR S	/	/	/	/
34	III	611216105034	MAHESWARI L	/	/	/	/
35	III	611216105035	MALLIKRISHNAN M	/	/	/	/
36	III	611216105036	MANOPRIYA K	/	/	/	9
37	III	611216105038	MOHANA PRIYA C	/	/	/	/
38	III	611216105039	MONICA S	/	/	/	/
39	III	611216105040	MONICA S L	9	/	/	/
40	III	611216105041	MONIGA L	/	/	/	/
41	III	611216105042	MUGESHRAJ R	/	/	/	/
42	III	611216105043	NANDHINI G	/	/	/	/
43	III	611216105044	NARMADHA R	/	/	/	/
44	III	611216105045	NAVEENVIGNESH R	/	/	/	/
45	III	611216105047	PAVITHRA K	/	/	/	/
46	III	611216105048	PIRUTHIKA S	/	/	/	/
47	III	611216105049	POONGODI A	/	/	/	/

PRINCIPAL,
Knowledge Institute of Technology
Kakapalayam (PO) Salem - 637 504

Sl.No	Year	Register Number	Student Name	12.06.18	13.06.18	14.06.18	15.06.18
48	III	611216105050	POONKUILAN S	/	/	/	/
49	III	611216105051	POOVARASAN A	/	/	/	/
50	III	611216105052	PREETHA S	/	/	/	/
51	III	611216105053	PREETHI K A	/	/	/	
52	III	611216105054	PRIYA DHARSHIKA M	/	/	/	a
53	III	611216105057	PUGALARASAN M	/	/	/	/
54	III	611216105058	RAHUL A N	/	/	/	/
55	III	611216105059	RAMYA S	/	/	/	/
56	III	611216105060	RAMYA PRIYANGAA S R	a	/	/	/
57	III	611216105061	RANJITH P	/	/	/	/
58	III	611216105063	SANGEETHA P R	/	/	/	/
59	III	611216105064	SARANRAJ S	/	/	/	/
60	III	611216105065	SATHISH R	/	/	/	/
61	III	611216105066	SHARMILA V	/	/	/	/
62	III	611216105067	SIVAKUMAR G	/	/	/	/
63	III	611216105068	SIVAKUMAR M	/	/	/	/
64	III	611216105069	SIVA PRAKASH S V	/	/	/	/
65	III	611216105070	SOUNDHARYADEVI G	/	/	/	/
66	III	611216105072	SRIPAVATHAARANI S	/	/	/	/
67	III	611216105073	SUTHARSANAN E	/	/	/	/
68	III	611216105074	SWETHA P	/	/	/	/
69	III	611216105075	SYED DAANISH M	/	a	/	/
70	III	611216105076	TAMILARASAN V	/	/	/	/
71	III	611216105077	THOGAI VADIVU V	/	/	/	/
72	III	611216105078	UDHAYA I	/	/	/	/
73	III	611216105079	VASHIFA S	/	/	/	/
74	III	611216105081	VIGNESH M	/	/	/	/
75	III	611216105082	VIGNESH S	/	/	/	/
76	III	611216105083	VIGNESHWARAN K	/	/	/	/
77	III	611216105084	VINOTHKUMAR A	/	/	/	/
78	III	611216105085	YAGESHWARAN S	/	/	/	/
79	III	611216105086	YUHANA SHERIN S	/	/	/	/
80	III	611216105087	YUVARANI N	/	/	/	/
81	III	611216105301	BABU SHANKAR S K	/	/	/	/
82	III	611216105303	BARGAVI M	/	/	/	/
83	III	611216105305	GOKULNATH K	/	/	/	/
84	III	611216105306	MADHANKUMAR J	/	/	/	/
85	III	611216105307	MANI SHANKAR M	a	/	/	/
86	III	611216105308	MOHANRAJ S	/	/	/	/
87	III	611216105309	NAVEENKUMAR R	/	/	/	/
88	III	611216105310	PRASANTH M	/	/	/	/
89	III	611216105313	RADHA K	/	/	/	/
90	III	611216105314	RAGUL S	/	/	/	/
91	III	611216105316	SANTHOSHKUMAR M	/	/	/	a
92	III	611216105319	THAMARAISELVAN R	/	/	/	/
93	III	611216105701	GUMUTHAA S	/	/	/	/
94	III	611216105702	RAVIKUMAR L	/	/	/	/
			No. of Students Present	88	93	91	89
			No of Students Absent	6	1	3	5

15/6/18
Dept. ~~CC~~ Coordinator

15/06/18
HOD/EEE

PRINCIPAL
Knowledge Institute of Technology
Kakapalayam (PO) Salem - 637 5

KNOWLEDGE INSTITUTE OF TECHNOLOGY,SALEM-637504

DEPARTMENT OF COMPUTER SCIENCE & ENGINEERING

Problem Solving and Computer Programming using E-Box (Module I)

12.06.2018 - 15.06.2018 | Assessment Report

Sl.No	Year	Register Number	Student Name	Final Assessment %
1	II A	611217104001	AAKASH M C	67
2	II A	611217104003	AISHWARYA K	78
3	II A	611217104005	ANITHA R	76
4	II A	611217104007	BALAKRISHNAN C	74
5	II A	611217104008	BHARATHY KANNAN M R	83
6	II A	611217104009	BHAVANI S	73
7	II A	611217104011	DARSHANA A	69
8	II A	611217104013	DEEPA K	76
9	II A	611217104016	DHANUSEYA M	80
10	II A	611217104017	DHARANIDHARAN M	71
11	II A	611217104019	DHIKSHA M P	66
12	II A	611217104020	DHILEEP N	65
13	II A	611217104023	DINESHKUMAR S	67
14	II A	611217104024	DIWAGAR S	73
15	II A	611217104026	ELANGO A	82
16	II A	611217104028	GOKULA PRIYA V	81
17	II A	611217104029	GOKULRAJ P	83
18	II A	611217104030	GOKULRAJAN M	82
19	II A	611217104031	GOUTHAM P	73
20	II A	611217104032	GOWTHAM G	81
21	II A	611217104034	HARI PRASANTH M	76
22	II A	611217104036	JAGADEEP T	76
23	II A	611217104037	JANANI B (02.03.2000)	65
24	II A	611217104039	KARTHIK T S	75
25	II A	611217104040	KAVIN SARVESH A	75
26	II A	611217104043	MANISH T	78
27	II A	611217104044	MEENAAKUMARI P	71
28	II A	611217104046	MITHILESH K S	79
29	II A	611217104048	MOHANAPRIYA K	72
30	II A	611217104049	MONIGA SAROJA E	83
31	II A	611217104051	MONISHKUMAR B	70

Principal,
Knowledge Institute of Technology
Kakapalayam (Po), Salem-637 504

32	II A	611217104052	MURALI KRISHNAN M	69
33	II A	611217104054	NAGAPRIYA N	69
34	II A	611217104056	NAVEENA M	83
35	II A	611217104057	PADMAVEERASHREE L	67
36	II B	611217104060	POOJA C	78
37	II B	611217104066	PRAVEEN S	81
38	II B	611217104071	PRIYADHARSHNI A	65
39	II B	611217104072	PRIYADHARSHINI M	80
40	II B	611217104076	RAJAMANI G	65
41	II B	611217104078	RANJIT PRASATH S	81
42	II B	611217104079	ROOBAN KUMAR R	83
43	II B	611217104086	SANTHIYA G	69
44	II B	611217104088	SARAN S	77
45	II B	611217104090	SATHAPPAN M	72
46	II B	611217104094	SHWETHA S	79
47	II B	611217104099	SOUNDAR T	82
48	II B	611217104101	SOUNDHARYA S M	73
49	II B	611217104104	SOWNDHARYA S	69
50	II B	611217104106	SRI PAVISH U	79
51	II B	611217104108	SUBASH S	78
52	II B	611217104112	SURIYA M	65
53	II B	611217104113	SURYA GANESH H A	72
54	II B	611217104116	VAISHNAVIE R	68
55	II B	611217104118	VIGNESH J	82
56	II B	611217104120	VIJAY S	75
57	II B	611217104302	SRI VAIGUNTHA M	70

**Max Marks - 100 | Min Marks - 60

15/6/18
Faculty Incharge

12/6/18
HOD

Principal,
Knowledge Institute of Technology
Kakapalayam (Po), Salem-637 504

CERTIFICATE

OF COMPLETION

This is to certify that **DHIKSHA M P**, **Knowledge Institute of Technology, Salem** , has sucessfully completed the certificate course on **Problem Solving and Computer Programming using E-Box (Module I)** during **12.06.2018 - 15.06.2018**.

amphisoft

Principal,
Knowledge Institute of Technology
Kakapalayam (Po), Salem-637 504

Mrs. Punitha Pradeep
Founder & Director

EBOX
AN AMPHISOFT PRODUCT

CERTIFICATE

OF COMPLETION

This is to certify that **MONIGA SAROJA E**, **Knowledge Institute of Technology, Salem** , has sucessfully completed the certificate course on **Problem Solving and Computer Programming using E-Box (Module I)** during **12.06.2018 - 15.06.2018**.

amphisoft

Principal,
Knowledge Institute of Technology
Kakapalayam (Po), Salem-637 504

Mrs. Punitha Pradeep
Founder & Director

EBOX
AN AMPHISOFT PRODUCT

CERTIFICATE

OF COMPLETION

This is to certify that **DIWAGAR S**, **Knowledge Institute of Technology, Salem** , has sucessfully completed the certificate course on **Problem Solving and Computer Programming using E-Box (Module I)** during **12.06.2018 - 15.06.2018**.

amphisoft

Principal,
Knowledge Institute of Technology
Kakapalayam (Po), Salem-637 504

Mrs. Punitha Pradeep
Founder & Director

EBOX
AN AMPHISOFT PRODUCT

CERTIFICATE

OF COMPLETION

This is to certify that **RAJAMANI G**, **Knowledge Institute of Technology, Salem** , has sucessfully completed the certificate course on **Problem Solving and Computer Programming using E-Box (Module I)** during **12.06.2018 - 15.06.2018**.

amphisoft

Principal,
Knowledge Institute of Technology
Kakapalayam (Po), Salem-637 504

Mrs. Punitha Pradeep
Founder & Director

eBOX
AN AMPHISOFT PRODUCT

CERTIFICATE

OF COMPLETION

This is to certify that **SRI PAVISH U**, **Knowledge Institute of Technology, Salem ,** has sucessfully completed the certificate course on **Problem Solving and Computer Programming using E-Box (Module I)** during **12.06.2018 - 15.06.2018**.

amphisoft

Principal,
Knowledge Institute of Technology
Kakapalayam (Po), Salem-637 504

Mrs. Punitha Pradeep
Founder & Director

KNOWLEDGE INSTITUTE OF TECHNOLOGY, SALEM.

Department of Computer Science and Engineering

FEEDBACK FORM

Type of Course: Certificate Course

Name of the Student: gokul . T

Course Title: problem solving and computer using e-box (H2)

Year/ Sem: II / 3

Dept : CSE

Date: 15/06/18

Parameters	Please Tick mark on the appropriate box				
	Excellent (5)	Good (4)	Satisfactory (3)	Poor (2)	Very Poor (1)
Resource person knowledge on the Course	✓				
Course Delivery		✓			
Practical Experience			✓		
Additional resources available		✓			
Overall rating about lecture and Training		✓			

Positive points about the Lecture:

examples are good
easy to understand

Suggestions for improvement:

Principal,
Knowledge Institute of Technology
Kakapalayam (Po), Salem-637 5(

T. gokul

(Signature of the student)

KNOWLEDGE INSTITUTE OF TECHNOLOGY, SALEM.

Department of Computer Science and Engineering

FEEDBACK FORM

Type of Course: Certificate Course

Name of the Student: Aakash C

Course Title: problem solving and computer programming using C (Module-I)

Year/ Sem: II / III

Dept : CSE

Date: 15/6/19

Parameters	Please Tick mark on the appropriate box				
	Excellent (5)	Good (4)	Satisfactory (3)	Poor (2)	Very Poor (1)
Resource person knowledge on the Course	✓				
Course Delivery		✓			
Practical Experience	✓				
Additional resources available		✓			
Overall rating about lecture and Training		✓			

Positive points about the Lecture:

Detail Explanation about 'c' and it advance topic

Suggestions for improvement:

Principal,
Knowledge Institute of Technology
Kakapalayam (Po), Salem-637 504

(Signature of the student)

KNOWLEDGE INSTITUTE OF TECHNOLOGY, SALEM.

Department of Computer Science and Engineering

FEEDBACK FORM

Type of Course: Certificate Course

Name of the Student: S. bhavani

Course Title: Problem Solving and Computer programming using E-box (M-I)

Year/ Sem: II/3

Dept : CSE

Date: 15.6.18

Parameters	Please Tick mark on the appropriate box				
	Excellent (5)	Good (4)	Satisfactory (3)	Poor (2)	Very Poor (1)
Resource person knowledge on the Course	✓				
Course Delivery	✓				
Practical Experience	✓				
Additional resources available	✓				
Overall rating about lecture and Training		✓			

Positive points about the Lecture:

Lot of problems in C to solve by our own and good training way.

Suggestions for improvement:

Principal,
Knowledge Institute of Technology
Kakapalayam (Po), Salem-6

Sbhavani
(Signature of the student)

KNOWLEDGE INSTITUTE OF TECHNOLOGY, SALEM.

Department of Computer Science and Engineering

FEEDBACK FORM

Type of Course: Certificate Course

Name of the Student: Deepa K

Course Title: Problem Solving and computer programming using E-box (M1)

Year/ Sem: II | 3

Date: 15/6/18

Dept : CSE

Parameters	Please Tick mark on the appropriate box				
	Excellent (5)	Good (4)	Satisfactory (3)	Poor (2)	Very Poor (1)
Resource person knowledge on the Course		✓			
Course Delivery		✓			
Practical Experience	✓				
Additional resources available			✓		
Overall rating about lecture and Training		✓			

Positive points about the Lecture:

Good explanation with syntax and examples for each was given

Suggestions for improvement:

Principal,
Knowledge Institute of Technology
Kakapalayam (Po), Salem-637 504

(Signature of the student)

KNOWLEDGE INSTITUTE OF TECHNOLOGY, SALEM.

Department of Computer Science and Engineering

FEEDBACK FORM

Type of Course: Certificate Course

Name of the Student: ELANGO. A

Course Title: PROBLEM SOLVING AND COMPUTER PROGRAMMING USING E-BOX (11=1)

Year/ Sem: II / III

Date: 15/06/18

Dept : CSE

Parameters	Please Tick mark on the appropriate box				
	Excellent (5)	Good (4)	Satisfactory (3)	Poor (2)	Very Poor (1)
Resource person knowledge on the Course	✓				
Course Delivery		✓			
Practical Experience			✓		
Additional resources available		✓			
Overall rating about lecture and Training	✓				

Positive points about the Lecture:

Explanation with real-time Examples is good and understandable.

Suggestions for improvement:

Need more materials (or) Notes.

Principal,
Knowledge Institute of Technology
Kakapalayam (Po), Salem-637 504

(Signature of the student)

KNOWLEDGE INSTITUTE OF TECHNOLOGY, SALEM – 637 504

Department of Computer Science and Engineering

REPORT OF THE EVENT			
Date	11.06.2018 - 15.06.2018	**Resource person**	Prof. T.Dhivya, Assistant Professor,CSE, KIOT
Time	9.00am – 5.00pm	**Title**	Problem Solving and Computer Programming using E-Box (Module II)
Venue	CC5 & CC6	**No. of Participants**	**147**

The Course Outcome are:

- Identify situations where computational methods and computers would be useful.
- Given a computational problem, identify and abstractthe programming task involved.
- Approach the programming tasks using techniques learned and write pseudo-code.
- Choose the right data representation formats based on the requirements of the problem.
- Use the comparisons and limitations of the various programming constructs and choose the right one for the task in hand.
- Write the program on a computer, edit, compile, debug, correct, recompile and run it.
- Identify tasks in which the numerical techniques learned are applicable and apply them to write programs, and hence use computers effectively to solve the task.

Encl: Circular / Brochure / Attendance Sheet

Principal,
Knowledge Institute of Technology
Kakapalayam (Po), Salem-637 504

KNOWLEDGE INSTITUTE OF TECHNOLOGY

(Approved by AICTE, New Delhi & Affiliated to Anna University, Chennai)

Problem Solving and Computer Programming using E-Box (Module II)

Course Syllabus

Array

- ✓ One dimensional arrays
- ✓ Declaration of 1D arrays
- ✓ Initialization of 1D arrays
- ✓ Accessing element of 1D arrays
- ✓ Reading and displaying elements
- ✓ Two dimensional arrays
- ✓ Declaration of 2D arrays
- ✓ Initialization of 2D arrays
- ✓ Accessing element of 2D arrays
- ✓ Reading and displaying elements

Structure

- ✓ Why is structure used?
- ✓ What is structure?
- ✓ Advantages of structures
- ✓ Defining a Structure
- ✓ Declaration of Structure Variables
- ✓ Initialization of Structure Variables
- ✓ Accessing Structure Members
- ✓ Storage of Structures in Memory
- ✓ Size of Structures
- ✓ Reading and Displaying Structure
- ✓ Variables
- ✓ Assignment of Structure Variables
- ✓ Pointers to structures
- ✓ Array of structures
- ✓ Arrays within structures
- ✓ Nested structures
- ✓ Self-referential structures
- ✓ memory link(linked list)
- ✓ Bit fields
- ✓ Programming Examples

Strings

- ✓ strings versus character arrays
- ✓ Initializing & Reading string
- ✓ Displaying string
- ✓ The %s format specifier
- ✓ The gets() and puts() functions
- ✓ string handling functions & pointers
- ✓ Two-dimensional character arrays
- ✓ array of string
- ✓ array of pointers to strings

Structure and Function

- ✓ Passing structure member to a function
- ✓ Passing structure variable to a function
- ✓ Passing structure variable address to a function
- ✓ Passing array of structure to a
- ✓ function
- ✓ Returning a structure variable from
- ✓ function
- ✓ Returning a structure variable
- ✓ address from function
- ✓ Returning structure variable from a
- ✓ function

Principal,
Knowledge Institute of Technology
Kakapalayam (Po), Salem-637 504

28.05.2018
Salem

From

Prof.R.Saranya,
Assistant Professor,
Department of Computer Science and Engineering
Knowledge Institute of Technology,
Salem- 637 504.

To

The Principal,
Knowledge Institute of Technology,
Salem- 637504.

Through,
Head of the Department/CSE

Respected Sir,

Subject: Requisition for Conducting Certification Course-Reg.

We have planned to conduct certification course on "Problem Solving and Computer Programming using E-Box (Module II)" from 11.06.2018 - 15.06.2018 for a period of 05 days with the duration of 40 hours. This course will be helpful for the skill development and placement of our III year students. In this regard, we request you to endowment as permission to conduct the course.

The course details are as follows:

SL. NO.	NAME OF THE PROGRAM	VENUE DATE & TIME	RESOURCE PERSON
1	Certificate Course on Problem Solving and Computer Programming using E-Box (Module II)	CC5, CC6 11.06.2018 -15.06.2018 9.00am – 5.00pm	**Prof. T.Dhivya** Assistant Professor, Department of Computer Science and Engineering

Thank you,

Yours truly,

28/5/18

28/5/18
HOD/CSE

Principal,
Knowledge Institute of Technology
Kakapalayam (Po), Salem-637 504.

PRINCIPAL

KNOWLEDGE INSTITUTE OF TECHNOLOGY, SALEM - 637 504			
CIRCULAR			
Circular No.	2018/CC/ODD/02	**Date**	**05.06.2018**
To	All II Year Students		
Subject	Certificate Course on Problem Solving and Computer Programming using E-Box (Module II)		
Circular issued by	Department of Computer Science and Engineering		

This is to inform you that Department of Computer Science and Engineering has planned to conduct a **CERTIFICATE COURSE** on **Problem Solving and Computer Programming using E-Box (Module II)** in association with Amphisoft for ALL the III year students. Interested students are requested to register their names to the course In-charge.

SL. NO.	NAME OF THE PROGRAM	VENUE DATE & TIME	RESOURCE PERSON
1	Certificate Course on Problem Solving and Computer Programming using E-Box (Module II)	CC5, CC6 - 11.06.2018 - 15.06.2018 & 9.00am – 5.00pm	**Prof. T.Dhivya** Assistant Professor, Department of Computer Science and Engineering

Course Incharge: Prof. R.Saranya, Assistant Professor/CSE

HOD/CSE		PRINCIPAL

MECH	VP Office	CIVIL	EEE	ECE	CSE	S& H	PD	LIB	EMS	AO	Transport I/C	Hostel NB	Director/ Training	Director/ Placement	Residential Warden		College NB	Office/ File	Class Circulation	Security Office	KBS	Reception
															LH	GH						
•	•	•	•	•	•								•	•				•	•			

Principal,
Knowledge Institute of Technology
Kakapalayam (Po), Salem-637 504.

KNOWLEDGE INSITITE OF TECHNOLOGY,SALEM-637504

DEPARTMENT OF COMPUTER SCIENCE & ENGINEERING

Problem Solving and Computer Programming using E-Box (Module II)

11.06.2018 - 15.06.2018

Enrolled Student NameList

Sl.No	Year	Register Number	Student Name
1	III A	611216104001	ABARNA S
2	III A	611216104004	ANNAMALAI N
3	III A	611216104005	ANUREKA J
4	III A	611216104006	ARULANAN D S
5	III A	611216104007	ASMITHHAN K
6	III A	611216104008	AYSHWARYAA N
7	III A	611216104011	BOPESH NANDHA P
8	III A	611216104014	DEEPALAKSHMI S
9	III A	611216104015	DEEPIKAS
10	III A	611216104017	DINAKARAN M
11	III A	611216104018	ELAKYAA A
12	III A	611216104019	GANDHIARUMUGAM K
13	III A	611216104021	GAYATHRI S
14	III A	611216104022	GOKUL S
15	III A	611216104024	GOWTHAM J
16	III A	611216104025	GOWTHAM P V
17	III A	611216104027	HAFSANAFATHIMAA R
18	III A	611216104029	HARIHARAN M (15-06-1999)
19	III A	611216104031	HARINI K G
20	III A	611216104032	HARINI SRI R
21	III A	611216104035	HARI VIGNESH S
22	III A	611216104036	HARSHITHAR
23	III A	611216104037	INBARAJ S
24	III A	611216104038	JAISHRI P K
25	III A	611216104039	JAMUNAK
26	III A	611216104042	JEEVANANTHAM N
27	III A	611216104043	JOHN PETER P

Principal,
Knowledge Institute of Technology
Kakapalayam (Po), Salem-637 504

28	III A	611216104046	KALAIVANI P
29	III A	611216104047	KANMANI V
30	III A	611216104050	KAVIPRIYA R
31	III A	611216104052	KEERTHIKA N
32	III A	611216104053	KOWSHIKA S
33	III A	611216104054	KUMARI SNEHALJHA
34	III A	611216104056	LOGESHWARI R
35	III A	611216104058	MADHUMIDA S
36	III B	611216104060	MANESHA S
37	III B	611216104063	MANOJ S
38	III B	611216104065	MOHANAPRIYAA M
39	III B	611216104067	NANDHIKA R
40	III B	611216104069	NARMADHA R
41	III B	611216104072	NIVETHA S
42	III B	611216104074	POOJAD
43	III B	611216104079	PRIYADHARSHINI K
44	III B	611216104081	RAVINDRAN V
45	III B	611216104083	RUBIGHAM
46	III B	611216104086	SARANYA D
47	III B	611216104088	SATHISH L
48	III B	611216104092	SHARMILAR
49	III B	611216104095	SIVABALAN P
50	III B	611216104098	SONAS
51	III B	611216104100	SRIGOKULNATH S
52	III B	611216104101	SRIMATHI M
53	III B	611216104104	SUPRAJAP
54	III B	611216104106	TASNEEM FIRDOUSE S
55	III B	611216104107	VANITHAPRIYAN
56	III B	611216104301	GEETHANJALIN K
57	III B	611216104303	RAJESH KUMAR P
58	III B	611216104304	SOWNDARRAJAN C

11/6/18
Faculty Incharge

11/06/18
HOD

Principal,
Knowledge Institute of Technology
Kakapalayam (Po), Salem-637 504

KNOWLEDGE INSITITE OF TECHNOLOGY,SALEM-637504

DEPARTMENT OF ELECTRICAL AND ELECTRONICS ENGINEERING

Problem Solving and Computer Programming using E-Box (Module II)

11.06.2018 - 15.06.2018 | Students Enrollment List

Sl.No	Year	Register Number	Student Name
1	IV	611215105001	AARTHI A
2	IV	611215105003	AKILA K
3	IV	611215105004	AKSHAYA L
4	IV	611215105005	ALAGUVAIRAVASUNDARAM S
5	IV	611215105006	ANANDHA PADMANABAN.V
6	IV	611215105007	ANANTH S
7	IV	611215105009	ANBARASI.T
8	IV	611215105010	ARUN K
9	IV	611215105012	BALA MURUGAN.M
10	IV	611215105013	BARATH KUMAR.V
11	IV	611215105014	BASKARAN.A
12	IV	611215105016	BHAVANI.P
13	IV	611215105017	CHIBIMUKIL N
14	IV	611215105019	DEEPAN RAJ.R
15	IV	611215105020	DEEPTHIKA.B
16	IV	611215105022	DHARANI.T
17	IV	611215105023	DHIVISHYA.M
18	IV	611215105024	DINESH KUMAR N
19	IV	611215105026	FARITHAFARVEEN M
20	IV	611215105027	GANESH KUMAR.P.R
21	IV	611215105028	GNANESHWARI.M.N
22	IV	611215105029	GOKUL.D
23	IV	611215105030	GOKULRAJ R
24	IV	611215105033	GOWTHAM N
25	IV	611215105035	HARIHARAN.E
26	IV	611215105036	JAYASHREE.J
27	IV	611215105037	JEEVA M
28	IV	611215105038	KANNAN.P
29	IV	611215105040	KARTHIKA V
30	IV	611215105041	KAVIN.R
31	IV	611215105042	KAVYAA K
32	IV	611215105043	KEERTHANA C
33	IV	611215105044	KIRTHIKA SOWMINI M.J.R
34	IV	611215105046	KIRUTHIKA. M
35	IV	611215105047	KOWSALYA.K
36	IV	611215105049	KOWSALYA.V
37	IV	611215105050	KOWSHIKA V
38	IV	611215105051	KRISHNAMOORTHI.P
39	IV	611215105052	MADHUSUDHANAN.B
40	IV	611215105055	MANISHA.P
41	IV	611215105056	MEENA T
42	IV	611215105057	MOHANA PRIYA R
43	IV	611215105058	MYTHILIPRIYA U S
44	IV	611215105059	NAGARAJ S
45	IV	611215105062	NAVINA L.R
46	IV	611215105063	NIVETHA S
47	IV	611215105064	PASUPATHI A

PRINCIPAL,
Knowledge Institute of Technology
Kakapalayam (PO) Salem - 637 504

Sl.No	Year	Register Number	Student Name
48	IV	611215105065	PAVITHIRAN.P
49	IV	611215105068	PAVITHRAN.P
50	IV	611215105069	PRABHA DEVI.C
51	IV	611215105070	PRABHAKARAN R
52	IV	611215105071	PRADEEP M
53	IV	611215105073	PREETHI K
54	IV	611215105075	PRIYADHARSHINI A
55	IV	611215105077	RAHUL NATARAJAN K
56	IV	611215105080	RAVIKUMAR N
57	IV	611215105082	SABANA.S
58	IV	611215105083	SAI SOUNDARYA K
59	IV	611215105084	SANDHIYA M
60	IV	611215105085	SANGEETHA K
61	IV	611215105086	SANJAY.J.S
62	IV	611215105087	SANTHIYA K K
63	IV	611215105088	SANTHOSH M
64	IV	611215105089	SANTHOSH R
65	IV	611215105091	SELVAKUMAR.S
66	IV	611215105092	SELVARAJ A
67	IV	611215105098	SOUNDARYAN.R
68	IV	611215105099	SOWMIYA.M
69	IV	611215105101	SRIMATHI R
70	IV	611215105103	SRIVIDHYA.S
71	IV	611215105105	SURENDAR S
72	IV	611215105106	SURUTHI.R
73	IV	611215105108	SUWATHI R
74	IV	611215105109	TAMILARASAN.S
75	IV	611215105112	THARANI.V
76	IV	611215105113	THIRUGNANARAMAN.S.V
77	IV	611215105114	THISHAM S
78	IV	611215105115	VASANTHAKUMAR.M
79	IV	611215105117	VIGNESHWARAN.S
80	IV	611215105119	YUVALAKSHMI D
81	IV	611215105303	GUNASEKARAN A
82	IV	611215105306	MATHESH K
83	IV	611215105307	PAVITHRA R
84	IV	611215105310	PRIYADHARSHINI T
85	IV	611215105312	SIVA G
86	IV	611215105313	THAMARAI SELVAN S
87	IV	611215105314	UMASANKAR S
88	IV	611215105316	VIGNESHWARAN S
89	IV	611215105317	VISHNU PRIYA S

Dept. CC Coordinator

HOD/EEE

PRINCIPAL
Knowledge Institute of Technology
Kakapalayam (PO) Salem - 637 5

KNOWLEDGE INSITITE OF TECHNOLOGY,SALEM-637504

DEPARTMENT OF COMPUTER SCIENCE & ENGINEERING

Problem Solving and Computer Programming using E-Box (Module II)

SYLLABUS & SCHEDULE

Day	Session	Contents
DAY 1	FN	Array, One dimensional arrays, Declaration of 1D arrays, Initialization of 1D arrays
	AN	Accessing element of 1D arrays, Reading and displaying elements, Two dimensional arrays, Declaration of 2D arrays, Initialization of 2D arrays
DAY 2	FN	Accessing element of 2D arrays, Reading and displaying elements, Declaration of Structure Variables, Initialization of Structure Variables,
	AN	Accessing Structure Members, Storage of Structures in Memory, Size of Structures, Reading and Displaying Structure
DAY 3	FN	Variables, Assignment of Structure Variables, Pointers to structures, Array of structures
	AN	Nested structures, Self-referential structures, memory link(linked list), Bit fields
DAY 4	FN	strings versus character arrays,Initializing & Reading string, Displaying string, The %s format specifier, The gets() and puts() functions,
	AN	string handling functions & pointers, Two-dimensional character arrays, array of string, array of pointers to strings
DAY 5	FN	Passing structure member to a function, Passing structure variable to a function, Passing structure variable address to a function, Passing array of structure to a function,
	AN	Returning a structure variable from function, Returning a structure variable address from function, Returning structure variable from a function

28/5/18

Course Cordinator

HOD

Principal,
Knowledge Institute of Technology,
Kakapalayam (Po), Salem-637 504

KNOWLEDGE INSITITE OF TECHNOLOGY,SALEM-637504

DEPARTMENT OF COMPUTER SCIENCE & ENGINEERING

Problem Solving and Computer Programming using E-Box (Module II)

11.06.2018 - 15.06.2018 | Course Attendance

Sl.No	Year	Register Number	Student Name	11.6.18	12.6.18	13.6.18	14.6.18	15.6.18
1	III A	611216104001	ABARNA S	1	1	1	1	1
2	III A	611216104004	ANNAMALAI N	1	1	1	1	1
3	III A	611216104005	ANUREKA J	1	1	1	1	1
4	III A	611216104006	ARULANAN D S	1	1	1	A	1
5	III A	611216104007	ASMITHHAN K	1	1	1	1	1
6	III A	611216104008	AYSHWARYAA N	1	1	1	1	1
7	III A	611216104011	BOPESH NANDHA P	1	1	1	1	1
8	III A	611216104014	DEEPALAKSHMI S	1	1	1	1	1
9	III A	611216104015	DEEPIKAS	1	1	1	1	1
10	III A	611216104017	DINAKARAN M	1	1	1	1	1
11	III A	611216104018	ELAKYAA A	1	1	1	1	1
12	III A	611216104019	GANDHIARUMUGAM K	1	1	1	1	1
13	III A	611216104021	GAYATHRI S	1	1	1	1	1
14	III A	611216104022	GOKUL S	1	1	1	1	1
15	III A	611216104024	GOWTHAM J	1	1	1	1	1
16	III A	611216104025	GOWTHAM P V	1	1	1	1	1
17	III A	611216104027	HAFSANAFATHIMAA R	1	1	1	1	1
18	III A	611216104029	HARIHARAN M (15-06-1999)	1	1	1	1	1
19	III A	611216104031	HARINI K G	1	1	1	1	1
20	III A	611216104032	HARINI SRI R	1	1	1	1	1
21	III A	611216104035	HARI VIGNESH S	1	1	1	1	1
22	III A	611216104036	HARSHITHAR	1	1	1	1	1
23	III A	611216104037	INBARAJ S	1	1	1	1	1
24	III A	611216104038	JAISHRI P K	1	1	1	A	1
25	III A	611216104039	JAMUNAK	1	1	1	1	1
26	III A	611216104042	JEEVANANTHAM N	1	1	1	1	1
27	III A	611216104043	JOHN PETER P	1	1	1	1	1
28	III A	611216104046	KALAIVANI P	1	1	1	1	1
29	III A	611216104047	KANMANI V	1	1	1	1	1
30	III A	611216104050	KAVIPRIYA R	1	1	1	1	1
31	III A	611216104052	KEERTHIKA N	1	1	1	1	1
32	III A	611216104053	KOWSHIKA S	1	1	1	1	1

Principal,
Knowledge Institute of Technology
Kakapalayam (Po), Salem-637 504

33	III A	611216104054	KUMARI SNEHALJHA					
34	III A	611216104056	LOGESHWARI R					
35	III A	611216104058	MADHUMIDA S					
36	III B	611216104060	MANESHA S					
37	III B	611216104063	MANOJ S					
38	III B	611216104065	MOHANAPRIYAA M					
39	III B	611216104067	NANDHIKA R					
40	III B	611216104069	NARMADHA R					
41	III B	611216104072	NIVETHA S					
42	III B	611216104074	POOJAD					
43	III B	611216104079	PRIYADHARSHINI K					
44	III B	611216104081	RAVINDRAN V					
45	III B	611216104083	RUBIGHAM					
46	III B	611216104086	SARANYA D					
47	III B	611216104088	SATHISH L					
48	III B	611216104092	SHARMILAR					
49	III B	611216104095	SIVABALAN P					
50	III B	611216104098	SONAS					
51	III B	611216104100	SRIGOKULNATH S					
52	III B	611216104101	SRIMATHI M					
53	III B	611216104104	SUPRAJAP					
54	III B	611216104106	TASNEEM FIRDOUSE S					
55	III B	611216104107	VANITHAPRIYAN					
56	III B	611216104301	GEETHANJALIN K					
57	III B	611216104303	RAJESH KUMAR P					
58	III B	611216104304	SOWNDARRAJAN C					
No. of Students Present				58	57	57	56	57
No of Students Absent				—	01	01	02	01

15/6/18
Faculty Incharge

HOD

Principal,
Knowledge Institute of Technology
Kakapalayam (Po), Salem-637 504.

KNOWLEDGE INSITITE OF TECHNOLOGY,SALEM-637504

DEPARTMENT OF ELECTRICAL AND ELECTRONICS ENGINEERING

Problem Solving and Computer Programming using E-Box (Module II)

11.06.2018 - 15.06.2018 | Course Attendance

Sl.No	Year	Register Number	Student Name	11.06.18	12.06.18	13.06.18	14.06.18	15.06.18
1	IV	611215105001	AARTHI A	/	/	/	/	/
2	IV	611215105003	AKILA K	/	/	/	/	/
3	IV	611215105004	AKSHAYA L	/	/	/	/	/
4	IV	611215105005	ALAGUVAIRAVASUNDARAM S	A	/	/	/	/
5	IV	611215105006	ANANDHA PADMANABAN.V	/	/	/	/	/
6	IV	611215105007	ANANTH S	/	/	A	/	/
7	IV	611215105009	ANBARASI.T	/	/	/	/	/
8	IV	611215105010	ARUN K	/	/	/	/	/
9	IV	611215105012	BALA MURUGAN.M	/	A	/	/	/
10	IV	611215105013	BARATH KUMAR.V	/	/	/	/	A
11	IV	611215105014	BASKARAN.A	/	/	/	/	/
12	IV	611215105016	BHAVANI.P	A	/	/	/	/
13	IV	611215105017	CHIBIMUKIL N	/	/	/	/	/
14	IV	611215105019	DEEPAN RAJ.R	/	/	/	/	/
15	IV	611215105020	DEEPTHIKA.B	/	/	/	/	/
16	IV	611215105022	DHARANI.T	/	/	/	/	/
17	IV	611215105023	DHIVISHYA.M	A	/	/	/	/
18	IV	611215105024	DINESH KUMAR N	/	/	/	/	/
19	IV	611215105026	FARITHAFARVEEN M	/	/	/	/	/
20	IV	611215105027	GANESH KUMAR.P.R	/	/	/	/	A
21	IV	611215105028	GNANESHWARI.M.N	/	A	/	/	/
22	IV	611215105029	GOKUL.D	/	/	/	/	/
23	IV	611215105030	GOKULRAJ R	/	/	/	/	/
24	IV	611215105033	GOWTHAM N	/	/	/	A	/
25	IV	611215105035	HARIHARAN.E	/	/	/	/	/
26	IV	611215105036	JAYASHREE.J	/	/	/	/	/
27	IV	611215105037	JEEVA M	/	A	/	/	/
28	IV	611215105038	KANNAN.P	/	/	/	/	/
29	IV	611215105040	KARTHIKA V	/	/	/	/	/
30	IV	611215105041	KAVIN.R	/	/	/	/	/
31	IV	611215105042	KAVYAA K	/	/	A	/	/
32	IV	611215105043	KEERTHANA C	/	/	/	/	/
33	IV	611215105044	KIRTHIKA SOWMINI M.J.R	/	/	/	/	/
34	IV	611215105046	KIRUTHIKA. M	/	/	/	/	/
35	IV	611215105047	KOWSALYA.K	/	/	/	/	/
36	IV	611215105049	KOWSALYA.V	/	/	/	/	/
37	IV	611215105050	KOWSHIKA V	/	/	A	/	/
38	IV	611215105051	KRISHNAMOORTHI.P	/	/	/	/	/
39	IV	611215105052	MADHUSUDHANAN.B	/	/	/	/	/
40	IV	611215105055	MANISHA.P	/	/	/	A	/
41	IV	611215105056	MEENA T	/	/	/	A	/
42	IV	611215105057	MOHANA PRIYA R	/	/	/	/	/
43	IV	611215105058	MYTHILIPRIYA U S	/	/	/	/	/
44	IV	611215105059	NAGARAJ S	/	/	/	/	/
45	IV	611215105062	NAVINA L.R	/	/	/	/	/

PRINCIPAL
Knowledge Institute of Technology
Kakapalayam (PO) Salem - 637

Sl.No	Year	Register Number	Student Name	11.06.18	12.06.18	13.06.18	14.06.18	15.06.18
46	IV	611215105063	NIVETHA S	/	/	/	/	/
47	IV	611215105064	PASUPATHI A	/	/	/	/	/
48	IV	611215105065	PAVITHIRAN.P	/	/	/	A	/
49	IV	611215105068	PAVITHRAN.P	/	/	/	/	/
50	IV	611215105069	PRABHA DEVI.C	/	/	/	/	/
51	IV	611215105070	PRABHAKARAN R	/	/	/	/	/
52	IV	611215105071	PRADEEP M	/	/	/	/	/
53	IV	611215105073	PREETHI K	/	/	/	/	/
54	IV	611215105075	PRIYADHARSHINI A	/	/	/	/	/
55	IV	611215105077	RAHUL NATARAJAN K	/	/	/	/	/
56	IV	611215105080	RAVIKUMAR N	/	/	/	/	/
57	IV	611215105082	SABANA.S	A	/	/	/	/
58	IV	611215105083	SAI SOUNDARYA K	/	/	/	/	/
59	IV	611215105084	SANDHIYA M	/	/	/	/	/
60	IV	611215105085	SANGEETHA K	/	/	/	/	/
61	IV	611215105086	SANJAY.J.S	/	/	/	/	/
62	IV	611215105087	SANTHIYA K K	/	/	A	/	/
63	IV	611215105088	SANTHOSH M	/	/	/	/	/
64	IV	611215105089	SANTHOSH R	/	/	/	/	/
65	IV	611215105091	SELVAKUMAR.S	/	/	/	/	/
66	IV	611215105092	SELVARAJ A	/	/	/	/	/
67	IV	611215105098	SOUNDARYAN.R	/	/	/	/	/
68	IV	611215105099	SOWMIYA.M	/	/	/	/	/
69	IV	611215105101	SRIMATHI R	/	/	/	A	/
70	IV	611215105103	SRIVIDHYA.S	/	/	/	/	/
71	IV	611215105105	SURENDAR S	/	/	/	/	/
72	IV	611215105106	SURUTHI.R	/	/	/	/	/
73	IV	611215105108	SUWATHI R	/	/	/	/	/
74	IV	611215105109	TAMILARASAN.S	/	/	/	/	/
75	IV	611215105112	THARANI.V	/	/	/	/	/
76	IV	611215105113	THIRUGNANARAMAN.S.V	/	/	/	/	/
77	IV	611215105114	THISHAM S	A	/	/	/	/
78	IV	611215105115	VASANTHAKUMAR.M	/	/	/	/	
79	IV	611215105117	VIGNESHWARAN.S	/	/	/	/	/
80	IV	611215105119	YUVALAKSHMI D	/	/	/	/	/
81	IV	611215105303	GUNASEKARAN A	/	/	/	/	/
82	IV	611215105306	MATHESH K	/	/	/	/	/
83	IV	611215105307	PAVITHRA R	/	/	/	/	/
84	IV	611215105310	PRIYADHARSHINI T	/	/	/	/	/
85	IV	611215105312	SIVA G	/	/	/	/	/
86	IV	611215105313	THAMARAI SELVAN S	/	/	/	/	/
87	IV	611215105314	UMASANKAR S	/	/	/	/	/
88	IV	611215105316	VIGNESHWARAN S	/	/	/	/	/
89	IV	611215105317	VISHNU PRIYA S	/	/	/	/	/
			No. of Students Present	84	86	85	84	87
			No of Students Absent	5	3	4	5	2

15/06/18

Dept. CC Coordinator

15/06/18

HOD/EEE

PRINCIPAL
Knowledge Institute of Technology
Kakapalayam (PO) Salem - 637 504

KNOWLEDGE INSTITUTE OF TECHNOLOGY,SALEM-637504

DEPARTMENT OF COMPUTER SCIENCE & ENGINEERING

Problem Solving and Computer Programming using E-Box (Module II)

11.06.2018 - 15.06.2018 | Assessment Report

Sl.No	Year	Register Number	Student Name	Final Assessment %
1	III A	611216104001	ABARNA S	85
2	III A	611216104004	ANNAMALAI N	78
3	III A	611216104005	ANUREKA J	78
4	III A	611216104006	ARULANAN D S	86
5	III A	611216104007	ASMITHHAN K	72
6	III A	611216104008	AYSHWARYAA N	69
7	III A	611216104011	BOPESH NANDHA P	74
8	III A	611216104014	DEEPALAKSHMI S	81
9	III A	611216104015	DEEPIKA S	75
10	III A	611216104017	DINAKARAN M	72
11	III A	611216104018	ELAKYAA A	84
12	III A	611216104019	GANDHIARUMUGAM K	70
13	III A	611216104021	GAYATHRI Ş	80
14	III A	611216104022	GOKUL S	65
15	III A	611216104024	GOWTHAM J	85
16	III A	611216104025	GOWTHAM P V	80
17	III A	611216104027	HAFSANAFATHIMAA R	68
18	III A	611216104029	HARIHARAN M (15-06-1999)	77
19	III A	611216104031	HARINI K G	71
20	III A	611216104032	HARINI SRI R	85
21	III A	611216104035	HARI VIGNESH S	78
22	III A	611216104036	HARSHITHAR	72
23	III A	611216104037	INBARAJ S	78
24	III A	611216104038	JAISHRI P K	82
25	III A	611216104039	JAMUNA K	86
26	III A	611216104042	JEEVANANTHAM N	84
27	III A	611216104043	JOHN PETER P	77
28	III A	611216104046	KALAIVANI P	86
29	III A	611216104047	KANMANI V	76
30	III A	611216104050	KAVIPRIYA R	76

Principal,
Knowledge Institute of Technology
Kakapalayam (Po), Salem-637 504

31	III A	611216104052	KEERTHIKA N	74
32	III A	611216104053	KOWSHIKA S	70
33	III A	611216104054	KUMARI SNEHALJHA	85
34	III A	611216104056	LOGESHWARI R	83
35	III A	611216104058	MADHUMIDA S	69
36	III B	611216104060	MANESHA S	77
37	III B	611216104063	MANOJ S	69
38	III B	611216104065	MOHANAPRIYAA M	78
39	III B	611216104067	NANDHIKA R	65
40	III B	611216104069	NARMADHA R	72
41	III B	611216104072	NIVETHA S	72
42	III B	611216104074	POOJAD	78
43	III B	611216104079	PRIYADHARSHINI K	71
44	III B	611216104081	RAVINDRAN V	74
45	III B	611216104083	RUBIGHA M	79
46	III B	611216104086	SARANYA D	74
47	III B	611216104088	SATHISH L	82
48	III B	611216104092	SHARMILAR	78
49	III B	611216104095	SIVABALAN P	74
50	III B	611216104098	SONAS	65
51	III B	611216104100	SRIGOKULNATH S	78
52	III B	611216104101	SRIMATHI M	73
53	III B	611216104104	SUPRAJAP	73
54	III B	611216104106	TASNEEM FIRDOUSE S	66
55	III B	611216104107	VANITHAPRIYAN	75
56	III B	611216104301	GEETHANJALIN K	82
57	III B	611216104303	RAJESH KUMAR P	76
58	III B	611216104304	SOWNDARRAJAN C	86

**Max Marks - 100 | Min Marks - 60

15/6/18

Faculty Incharge

HOD

Principal,
Knowledge Institute of Technology
Kakapalayam (Po), Salem-637 504

eBOX
AN AMPHISOFT PRODUCT

CERTIFICATE

OF COMPLETION

This is to certify that **BOPESH NANDHA P**, **Knowledge Institute of Technology, Salem** , has sucessfully completed the certificate course on **Problem Solving and Computer Programming using E-Box (Module II)** during **11.06.2018 - 15.06.2018**.

amphisoft

Principal,
Knowledge Institute of Technology
Kakapalayam (Po), Salem-637 504

Mrs. Punitha Pradeep
Founder & Director

eBOX
AN AMPHISOFT PRODUCT

CERTIFICATE

OF COMPLETION

This is to certify that **DEEPIKAS**, **Knowledge Institute of Technology, Salem** , has sucessfully completed the certificate course on **Problem Solving and Computer Programming using E-Box (Module II)** during **11.06.2018 - 15.06.2018**.

amphisoft

Principal,
Knowledge Institute of Technology
Kakapalayam (Po), Salem-637 504

Mrs. Punitha Pradeep
Founder & Director

EBOX
AN AMPHISOFT PRODUCT

CERTIFICATE

OF COMPLETION

This is to certify that **GANDHIARUMUGAM K**, **Knowledge Institute of Technology, Salem** , has sucessfully completed the certificate course on **Problem Solving and Computer Programming using E-Box (Module II)** during **11.06.2018 - 15.06.2018**.

amphisoft

Principal,
Knowledge Institute of Technology
Kakapalayam (Po), Salem-637 504

Mrs. Punitha Pradeep
Founder & Director

EBOX
AN AMPHISOFT PRODUCT

CERTIFICATE

OF COMPLETION

This is to certify that **HAFSANAFATHIMAA R**, **Knowledge Institute of Technology, Salem** , has sucessfully completed the certificate course on **Problem Solving and Computer Programming using E-Box (Module II)** during **11.06.2018 - 15.06.2018**.

amphisoft

Principal,
Knowledge Institute of Technology
Kakapalayam (Po), Salem-637 504

Mrs. Punitha Pradeep
Founder & Director

eBOX
AN AMPHISOFT PRODUCT

CERTIFICATE

OF COMPLETION

This is to certify that **JAISHRI P K**, **Knowledge Institute of Technology, Salem ,** has sucessfully completed the certificate course on **Problem Solving and Computer Programming using E-Box (Module II)** during **11.06.2018 - 15.06.2018**.

amphisoft

Principal,
Knowledge Institute of Technology
Kakapalayam (Po), Salem-637 504

Mrs. Punitha Pradeep
Founder & Director

KNOWLEDGE INSTITUTE OF TECHNOLOGY, SALEM

Department of Computer Science and Engineering

FEEDBACK FORM

Type of Course: Certificate Course

Name of the Student: Kanmani . V

Course Title: problem Solving in Computer programming using C box module-2

Year/ Sem: III / 05

Dept : CSE

Date: 15/6/18

Parameters	Please Tick mark on the appropriate box				
	Excellent (5)	Good (4)	Satisfactory (3)	Poor (2)	Very Poor (1)
Resource person knowledge on the Course	✓				
Course Delivery		✓			
Practical Experience			✓		
Additional resources available	✓				
Overall rating about lecture and Training		✓			

Positive points about the Lecture:

Got somuch paogramming shortcut inputs. and easy to understand.

Suggestions for improvement:

Principal,
Knowledge Institute of Technology
Kakapalayam (Po), Salem-637 504

V. Kanmani

(Signature of the student)

KNOWLEDGE INSTITUTE OF TECHNOLOGY, SALEM.

Department of Computer Science and Engineering

FEEDBACK FORM

Type of Course: Certificate Course

Name of the Student: Supraja . P

Course Title: Problem Solving in computer programming using E-bo (M2)

Year/ Sem: III / 05

Dept : CSE

Date: 15 . 6 . 18

Parameters	Please Tick mark on the appropriate box				
	Excellent (5)	Good (4)	Satisfactory (3)	Poor (2)	Very Poor (1)
Resource person knowledge on the Course		✓			
Course Delivery		✓			
Practical Experience	✓				
Additional resources available			✓		
Overall rating about lecture and Training		✓			

Positive points about the Lecture:

Problem solving , Easy understanding

Suggestions for improvement:

Need more problems to get new ideas .

Principal,
Knowledge Institute of Technology
Kakapalayam (Po), Salem-637 504

(Signature of the student)

KNOWLEDGE INSTITUTE OF TECHNOLOGY, SALEM.

Department of Computer Science and Engineering

FEEDBACK FORM

Type of Course: Certificate Course

Name of the Student: Nandhika R

Course Title: Problem solving in computa programming using E-box-module

Year/ Sem: III / 05

Dept : CSE

Date: 15.6.18

Parameters	Please Tick mark on the appropriate box				
	Excellent (5)	Good (4)	Satisfactory (3)	Poor (2)	Very Poor (1)
Resource person knowledge on the Course		✓			
Course Delivery			✓		
Practical Experience	✓				
Additional resources available		✓			
Overall rating about lecture and Training		✓			

Positive points about the Lecture:

Good and easy to understand.

Suggestions for improvement:

Principal,
Knowledge Institute of Technology
Kakapalayam (Po), Salem-637 504

R. Nandhika

(Signature of the student)

KNOWLEDGE INSTITUTE OF TECHNOLOGY, SALEM.

Department of Computer Science and Engineering

FEEDBACK FORM

Type of Course: Certificate Course

Name of the Student: S. Srigokulnath

Course Title: problem solving and Computer programming using C box module-2

Year/ Sem: III / V

Dept : CSE

Date: 15/6/19

Parameters	Please Tick mark on the appropriate box				
	Excellent (5)	Good (4)	Satisfactory (3)	Poor (2)	Very Poor (1)
Resource person knowledge on the Course	✓				
Course Delivery					
Practical Experience	✓				
Additional resources available	✓				
Overall rating about lecture and Training	✓				

Positive points about the Lecture:

Detail about all topics clearly.

Suggestions for improvement:

Principal,
Knowledge Institute of Technology
Kakapalayam (Po), Salem-637 504

(Signature of the student)

KNOWLEDGE INSTITUTE OF TECHNOLOGY, SALEM.

Department of Computer Science and Engineering

FEEDBACK FORM

Type of Course: Certificate Course

Name of the Student: GOKUL. S

Course Title: PROBLEM solving and computer programming using E-BOX (M-II)

Year/ Sem: III/V

Dept : CSE

Date: 15/6/18

Parameters	Please Tick mark on the appropriate box				
	Excellent (5)	Good (4)	Satisfactory (3)	Poor (2)	Very Poor (1)
Resource person knowledge on the Course		✓			
Course Delivery	✓				
Practical Experience			✓		
Additional resources available		✓			
Overall rating about lecture and Training		✓			

Positive points about the Lecture:

clear Explanation

Suggestions for improvement:

Need more Examples to Get more ideas.

Principal,
Knowledge Institute of Technology
Kakapalayam (Po), Salem-637 504

(Signature of the student)

KNOWLEDGE INSTITUTE OF TECHNOLOGY, SALEM.

Department of Computer Science and Engineering

FEEDBACK FORM

Type of Course: Certificate Course

Name of the Student: Sona S

Course Title: Problem solving and computer programming using E-box (My)

Year/ Sem: III / V

Dept : CSE

Date: 15/06/18

Parameters	Please Tick mark on the appropriate box				
	Excellent (5)	Good (4)	Satisfactory (3)	Poor (2)	Very Poor (1)
Resource person knowledge on the Course		✓			
Course Delivery	✓				
Practical Experience		✓			
Additional resources available			✓		
Overall rating about lecture and Training		✓			

Positive points about the Lecture:

clear examples and explanation

Suggestions for improvement:

Principal,
Knowledge Institute of Technology
Kakapalayam (Po), Salem-637 504.

Sona. S

(Signature of the student)

KNOWLEDGE INSTITUTE OF TECHNOLOGY, SALEM – 637 504

Department of Computer Science and Engineering

REPORT OF THE EVENT			
Date	03.01.2019 - 10.01.2019	**Resource person**	Prof.P.Ramya, Assistant Professor, CSE, KIOT
Time	9.00am – 5.00pm	**Title**	Product Development and Programming using E-Box
Venue	CC11 & CC12	**No. of Participants**	**158**

The Course outcome are:

- Implement Object Oriented programming concept using basic syntaxes of control Structures, strings and function for developing skills of logic building activity.
- Identify classes, objects, members of a class and the relationships among them needed for a finding the solution to specific problem
- Demonstrates how to achieve reusability using inheritance, interfaces and packages and describes faster application development can be achieved.
- Demonstrate understanding and use of different exception handling mechanisms and concept of multithreading for robust faster and efficient application development.

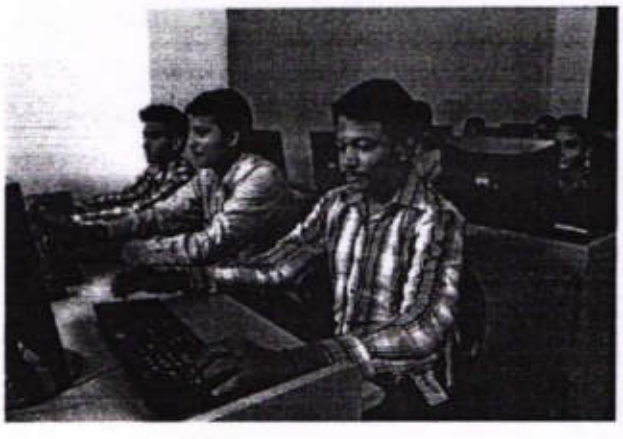

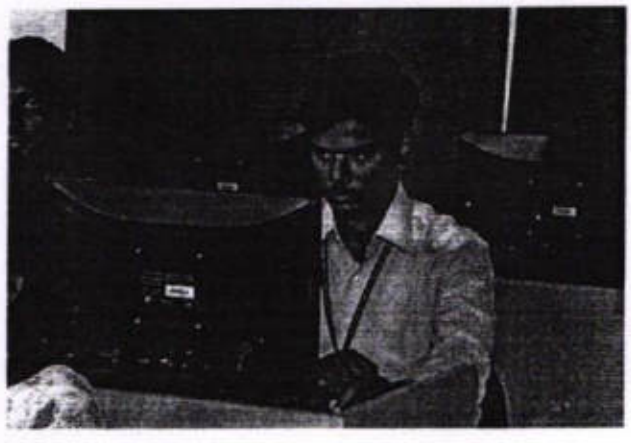

Encl: Circular / Brochure / Attendance Sheet

Principal,
Knowledge Institute of Technology
Kakapalayam (Po), Salem-637 504

KNOWLEDGE INSTITUTE OF TECHNOLOGY

(Approved by AICTE, New Delhi & Affiliated to Anna University, Chennai)

Design and System Programming using E-Box

Course Syllabus

Introduction to Abstract Data Types and analysis of different algorithms

- ✓ Review of elementary data types and structures in C. The Array data type and the importance of Random Access.
- ✓ Searching an array: linear and binary search. Sorting: Merge Sort, and analysis

ADT Array -- searching and sorting on arrays.

- ✓ Review of Pointers in C. The Linked list ADT.
- ✓ Searching a linked list, inserting and deleting from a linked list. Application: representing a univariate polynomial, and adding two univariate polynomials

ADT Linked Lists, Stacks, Queues.

- ✓ List manipulation algorithms: reversal of a list, use of recursion to reverse/search. Doubly linked lists, circular linked lists.
- ✓ Stack and Queue ADT, comparison of implementation using arrays and linked lists.

Binary Trees

- ✓ Tree ADT representation, traversal, application of binary trees in Huffman coding.
- ✓ Introduction to expression trees: Recursive traversal depth, height, and number of nodes. post/pre/infix notation.

Dictionary

- ✓ Binary search treessearch, insertion and deletion
- ✓ Balanced binary search trees.

ADT Priority queues

- ✓ Heap ADT implementation and Heapsort, in place sorting.
- ✓ Heaps for maintaining interval trees.

Graphs

- ✓ Representations or relations using matrices. The Graph ADT and applications
- ✓ Transitive closure, Flyod Warshall's algorithm and applications connectivity and spanning trees.

Advanced topics options for the teacher

- ✓ Adj. List representation of a Graph. Breadth First Search traversal and identification of shortest paths.
- ✓ Depth First Search recursive specification and application to finding articulation points.

Principal,
Knowledge Institute of Technology
Kakapalayam (Po), Salem-637 504

20.12.2018
Salem

From

Prof.R.Saranya,
Assistant Professor,
Department of Computer Science and Engineering
Knowledge Institute of Technology,
Salem- 637 504.

To

The Principal,
Knowledge Institute of Technology,
Salem- 637504.

Through,
Head of the Department/CSE

Respected Sir,

Subject: Requisition for Conducting Certification Course-Reg.

We have planned to conduct certification course on "Product Development and Programming using E-Box" from 03.01.2019 -10.01.2019 for a period of 06 days with the duration of 45 hours. This course will be helpful for the skill development and placement of our III year students. In this regard, we request you to endowment as permission to conduct the course.

The course details are as follows:

SL. NO.	NAME OF THE PROGRAM	VENUE DATE & TIME	RESOURCE PERSON
1	Certificate Course on Product Development and Programming using E-Box	CC11, CC12 - 03.01.2019 - 10.01.2019 & 9.00am – 5.00pm	**Prof. P.Ramya** Assistant Professor, Department of Computer Science and Engineering

Thank you,

Yours truly,

20/12/18

HOD/CSE

Principal,
Knowledge Institute of Technology
Kakapalayam (Po), Salem-637 504.

PRINCIPAL

KNOWLEDGE INSTITUTE OF TECHNOLOGY, SALEM - 637 504			
CIRCULAR			
Circular No.	2018/CC/EVEN/05	**Date**	**26.12.2018**
To	All III Year Students		
Subject	Certificate Course on Product Development and Programming using E-Box		
Circular issued by	Department of Computer Science and Engineering		

This is to inform you that Department of Computer Science and Engineering has planned to conduct a **CERTIFICATE COURSE** on **Product Development and Programming using E-Box** in association with Amphisoft for ALL the III year students. Interested students are requested to register their names to the course In-charge.

SL. NO.	NAME OF THE PROGRAM	VENUE DATE & TIME	RESOURCE PERSON
1	Certificate Course on Product Development and Programming using E-Box	CC11, CC12 03.01.2019 -10.01.2019 & 9.00am – 5.00pm	**Prof. P.Ramya** Assistant Professor, Department of Computer Science and Engineering

Course Incharge: Prof. R.Saranya, Assistant Professor/CSE

HOD/CSE		PRINCIPAL

MECH	VP Office	CIVIL	EEE	ECE	CSE	S& H	PD	LIB	EMS	AO	Transport I/C	Hostel NB	Director/ Training	Director/ Placement	Residential Warden		College NB	Office/ File	Class Circulation	Security Office	KBS	Reception
															LH	GH						
•	•	•	•	•	•								•	•				•	•			

Principal
Knowledge Institute of Technology
Kakapalayam (Po), Salem-637 504

KNOWLEDGE INSITITE OF TECHNOLOGY,SALEM-637504

DEPARTMENT OF COMPUTER SCIENCE & ENGINEERING

Product Development and Programming using E-Box

03.01.2019 - 10.01.2019

Enrolled Student NameList

Sl.No	Year	Register Number	Student Name
1	III A	611216104001	ABARNA S
2	III A	611216104004	ANNAMALAI N
3	III A	611216104005	ANUREKA J
4	III A	611216104006	ARULANAN D S
5	III A	611216104008	AYSHWARYAA N
6	III A	611216104011	BOPESH NANDHA P
7	III A	611216104017	DINAKARAN M
8	III A	611216104021	GAYATHRI S
9	III A	611216104022	GOKUL S
10	III A	611216104027	HAFSANAFATHIMAA R
11	III A	611216104029	HARIHARAN M (15-06-1999)
12	III A	611216104031	HARINI K G
13	III A	611216104032	HARINI SRI R
14	III A	611216104035	HARI VIGNESH S
15	III A	611216104036	HARSHITHAR
16	III A	611216104037	INBARAJ S
17	III A	611216104042	JEEVANANTHAM N
18	III A	611216104046	KALAIVANI P
19	III A	611216104047	KANMANI V
20	III A	611216104050	KAVIPRIYA R
21	III A	611216104052	KEERTHIKA N
22	III A	611216104054	KUMARI SNEHALJHA
23	III A	611216104056	LOGESHWARI R
24	III A	611216104058	MADHUMIDA S
25	III B	611216104060	MANESHA S
26	III B	611216104063	MANOJ S
27	III B	611216104065	MOHANAPRIYAA M

Principal,
Knowledge Institute of Technology
Kakapalayam (Po), Salem-637 504

28	III B	611216104067	NANDHIKA R
29	III B	611216104069	NARMADHA R
30	III B	611216104072	NIVETHA S
31	III B	611216104074	POOJAD
32	III B	611216104079	PRIYADHARSHINI K
33	III B	611216104083	RUBIGHAM
34	III B	611216104086	SARANYA D
35	III B	611216104088	SATHISH L
36	III B	611216104092	SHARMILAR
37	III B	611216104098	SONAS
38	III B	611216104100	SRIGOKULNATH S
39	III B	611216104101	SRIMATHI M
40	III B	611216104104	SUPRAJAP
41	III B	611216104106	TASNEEM FIRDOUSE S
42	III B	611216104301	GEETHANJALIN K
43	III B	611216104303	RAJESH KUMAR P
44	III B	611216104304	SOWNDARRAJAN C

3/1/19
Faculty Incharge

HOD 5/1/19

Principal,
Knowledge Institute of Technology
Kakapalayam (Po), Salem-637 504

KNOWLEDGE INSITITE OF TECHNOLOGY,SALEM-637504

DEPARTMENT OF COMPUTER SCIENCE & ENGINEERING

Design and System Programming using E-Box

SYLLABUS & SCHEDULE

Day	Session	Contents
DAY 1	FN	Introduction to Abstract Data Types and analysis of different algorithms
	AN	Searching an array: linear and binary search. Sorting: Merge Sort, and analysis
DAY 2	FN	ADT Array -- searching and sorting on arrays, Review of Pointers in C. The Linked list ADT.
	AN	ADT Linked Lists, Stacks, Queues, reverse/search. Doubly linked lists, circular linked lists.
DAY 3	FN	Stack and Queue ADT, comparison of implementation using arrays and linked lists
	AN	Binary Trees, Tree ADT representation, traversal, application of binary trees in Huffman coding.
DAY 4	FN	Expression trees: Recursive traversal depth, height, and number of nodes. post/pre/infix notation.
	AN	Dictionary, ADT Priority queues, Heap ADT implementation and Heapsort, in place sorting, Heaps for maintaining interval trees
DAY 5	FN	Graphs, matrices. The Graph ADT and applications
	AN	Flyod Warshall's algorithm and applications
DAY 6	FN	List representation of a Graph. Breadth First Search traversal and identification of shortest paths.
	AN	Depth First Search recursive specification and application to finding articulation points.

20/12/18

Course Cordinator

2018

HOD

Principal,
Knowledge Institute of Technology
Kakapalayam (Po), Salem-637 504

KNOWLEDGE INSITITE OF TECHNOLOGY,SALEM-637504

DEPARTMENT OF COMPUTER SCIENCE & ENGINEERING

Product Development and Programming using E-Box

03.01.2019 - 10.01.2019 | Course Attendance

Sl.No	Year	Register Number	Student Name	3.1.19	4.1.19	7.1.19	8.1.19	9.1.19	10.1.19
1	III A	611216104001	ABARNA S						
2	III A	611216104004	ANNAMALAI N						
3	III A	611216104005	ANUREKA J						
4	III A	611216104006	ARULANAN D S						
5	III A	611216104008	AYSHWARYAA N						
6	III A	611216104011	BOPESH NANDHA P						
7	III A	611216104017	DINAKARAN M						
8	III A	611216104021	GAYATHRI S						
9	III A	611216104022	GOKUL S						
10	III A	611216104027	HAFSANAFATHIMAA R						
11	III A	611216104029	HARIHARAN M (15-06-1999)						
12	III A	611216104031	HARINI K G						
13	III A	611216104032	HARINI SRI R						
14	III A	611216104035	HARI VIGNESH S						
15	III A	611216104036	HARSHITHAR						
16	III A	611216104037	INBARAJ S						
17	III A	611216104042	JEEVANANTHAM N						
18	III A	611216104046	KALAIVANI P						
19	III A	611216104047	KANMANI V						
20	III A	611216104050	KAVIPRIYA R						
21	III A	611216104052	KEERTHIKA N						
22	III A	611216104054	KUMARI SNEHALJHA						
23	III A	611216104056	LOGESHWARI R						
24	III A	611216104058	MADHUMIDA S						
25	III B	611216104060	MANESHA S						
26	III B	611216104063	MANOJ S						
27	III B	611216104065	MOHANAPRIYAA M						
28	III B	611216104067	NANDHIKA R						
29	III B	611216104069	NARMADHA R						

Principal,
Knowledge Institute of Technology,
Kakapalayam (Po), Salem-637 504.

30	III B	611216104072	NIVETHA S	✓	✓	✓	✓	✓	✓
31	III B	611216104074	POOJAD	✓	✓	✓	✓	a	✓
32	III B	611216104079	PRIYADHARSHINI K	✓	✓	✓	✓	✓	✓
33	III B	611216104083	RUBIGHAM	✓	✓	✓	a	✓	✓
34	III B	611216104086	SARANYA D	✓	✓	✓	✓	✓	✓
35	III B	611216104088	SATHISH L	✓	✓	✓	✓	✓	✓
36	III B	611216104092	SHARMILAR	✓	✓	✓	✓	✓	✓
37	III B	611216104098	SONAS	✓	a	✓	✓	✓	✓
38	III B	611216104100	SRIGOKULNATH S	✓	✓	✓	✓	✓	✓
39	III B	611216104101	SRIMATHI M	✓	✓	✓	✓	✓	✓
40	III B	611216104104	SUPRAJAP	✓	✓	✓	✓	✓	✓
41	III B	611216104106	TASNEEM FIRDOUSE S	✓	✓	✓	✓	✓	✓
42	III B	611216104301	GEETHANJALIN K	✓	✓	✓	✓	✓	✓
43	III B	611216104303	RAJESH KUMAR P	✓	✓	✓	✓	✓	✓
44	III B	611216104304	SOWNDARRAJAN C	✓	✓	✓	✓	✓	✓
			No. of Students Present	43	43	43	43	43	43
			No of Students Absent	01	01	01	01	01	01

10/1/19
Faculty Incharge

10/1/19
HOD

Principal,
Knowledge Institute of Technology
Kakapalayam (Po), Salem-637 504

KNOWLEDGE INSTITUTE OF TECHNOLOGY,SALEM-637504

DEPARTMENT OF COMPUTER SCIENCE & ENGINEERING

Product Development and Programming using E-Box

03.01.2019 - 10.01.2019 | Assessment Report

Sl.No	Year	Register Number	Student Name	Final Assessment %
1	III A	611216104001	ABARNA S	72
2	III A	611216104004	ANNAMALAI N	82
3	III A	611216104005	ANUREKA J	62
4	III A	611216104006	ARULANAN D S	79
5	III A	611216104008	AYSHWARYAA N	74
6	III A	611216104011	BOPESH NANDHA P	77
7	III A	611216104017	DINAKARAN M	79
8	III A	611216104021	GAYATHRI S	65
9	III A	611216104022	GOKUL S	88
10	III A	611216104027	HAFSANAFATHIMAA R	81
11	III A	611216104029	HARIHARAN M (15-06-1999)	77
12	III A	611216104031	HARINI K G	75
13	III A	611216104032	HARINI SRI R	75
14	III A	611216104035	HARI VIGNESH S	70
15	III A	611216104036	HARSHITHAR	62
16	III A	611216104037	INBARAJ S	84
17	III A	611216104042	JEEVANANTHAM N	63
18	III A	611216104046	KALAIVANI P	79
19	III A	611216104047	KANMANI V	80
20	III A	611216104050	KAVIPRIYA R	89
21	III A	611216104052	KEERTHIKA N	66
22	III A	611216104054	KUMARI SNEHALJHA	75
23	III A	611216104056	LOGESHWARI R	88
24	III A	611216104058	MADHUMIDA S	65
25	III B	611216104060	MANESHA S	81
26	III B	611216104063	MANOJ S	63
27	III B	611216104065	MOHANAPRIYAA M	64
28	III B	611216104067	NANDHIKA R	82
29	III B	611216104069	NARMADHA R	67
30	III B	611216104072	NIVETHA S	67

Principal,
Knowledge Institute of Technology
Kakapalayam (Po), Salem-637 504

31	III B	611216104074	POOJAD	74
32	III B	611216104079	PRIYADHARSHINI K	75
33	III B	611216104083	RUBIGHAM	62
34	III B	611216104086	SARANYA D	68
35	III B	611216104088	SATHISH L	65
36	III B	611216104092	SHARMILAR	66
37	III B	611216104098	SONAS	69
38	III B	611216104100	SRIGOKULNATH S	84
39	III B	611216104101	SRIMATHI M	79
40	III B	611216104104	SUPRAJAP	88
41	III B	611216104106	TASNEEM FIRDOUSE S	82
42	III B	611216104301	GEETHANJALIN K	73
43	III B	611216104303	RAJESH KUMAR P	62
44	III B	611216104304	SOWNDARRAJAN C	87

**Max Marks - 100 | Min Marks - 60

10/1/19
Faculty Incharge

10.1.19
HOD

Principal,
Knowledge Institute of Technology
Kakapalayam (Po), Salem-637 504

EBOX
AN AMPHISOFT PRODUCT

CERTIFICATE

OF COMPLETION

This is to certify that **KANMANI V**, **Knowledge Institute of Technology, Salem** , has sucessfully completed the certificate course on **Product Development and Programming using E-Box** during **03.01.2019 - 10.01.2019**.

amphisoft

Principal,
Knowledge Institute of Technology,
Kakapalayam (Po), Salem-637 504.

Mrs. Punitha Pradeep
Founder & Director

CERTIFICATE

OF COMPLETION

This is to certify that **SHARMILAR**, **Knowledge Institute of Technology, Salem ,** has sucessfully completed the certificate course on **Product Development and Programming using E-Box** during **03.01.2019 - 10.01.2019**.

amphisoft

Principal,
Knowledge Institute of Technology
Kakapalayam (Po), Salem-637 504.

Mrs. Punitha Pradeep
Founder & Director

CERTIFICATE

OF COMPLETION

This is to certify that **TASNEEM FIRDOUSE S**, **Knowledge Institute of Technology, Salem ,** has sucessfully completed the certificate course on **Product Development and Programming using E-Box** during **03.01.2019 - 10.01.2019**.

amphisoft

Principal,
Knowledge Institute of Technology
Kakapalayam (Po), Salem-637 504.

Mrs. Punitha Pradeep
Founder & Director

EBOX
AN AMPHISOFT PRODUCT

CERTIFICATE

OF COMPLETION

This is to certify that **SATHISH L**, **Knowledge Institute of Technology, Salem** , has sucessfully completed the certificate course on **Product Development and Programming using E-Box** during **03.01.2019 - 10.01.2019**.

amphisoft

Principal,
Knowledge Institute of Technology
Kakapalayam (Po), Salem-637 504

Mrs. Punitha Pradeep
Founder & Director

CERTIFICATE

OF COMPLETION

This is to certify that **GEETHANJALIN K**, **Knowledge Institute of Technology, Salem ,** has sucessfully completed the certificate course on **Product Development and Programming using E-Box** during **03.01.2019 - 10.01.2019**.

amphisoft

Principal,
Knowledge Institute of Technology
Kakapalayam (Po), Salem-637 504

Mrs. Punitha Pradeep
Founder & Director

KNOWLEDGE INSTITUTE OF TECHNOLOGY, SALEM.

Department of Computer Science and Engineering

FEEDBACK FORM

Type of Course: Certificate Course

Name of the Student: Narmadha R

Course Title: Product Development and programming using Ebox

Year/ Sem: III /06

Dept : CSE

Date: 10.1.2019

Parameters	Please Tick mark on the appropriate box				
	Excellent (5)	Good (4)	Satisfactory (3)	Poor (2)	Very Poor (1)
Resource person knowledge on the Course	✓				
Course Delivery		✓			
Practical Experience		✓			
Additional resources available			✓		
Overall rating about lecture and Training		✓			

Positive points about the Lecture:

Suggestions for improvement:

Need more practical hours

Principal,
Knowledge Institute of Technology
Kakapalayam (Po), Salem-637 504

Narmadha R.

(Signature of the student)

KNOWLEDGE INSTITUTE OF TECHNOLOGY, SALEM.

Department of Computer Science and Engineering

FEEDBACK FORM

Type of Course: Certificate Course

Name of the Student: Hasini. K. G

Course Title: Product development and programming using E-Box

Year/ Sem: IV - 6

Dept : CSE

Date: 10.1.2019

Parameters	Please Tick mark on the appropriate box				
	Excellent (5)	Good (4)	Satisfactory (3)	Poor (2)	Very Poor (1)
Resource person knowledge on the Course		✓			
Course Delivery		✓			
Practical Experience	✓		✓		
Additional resources available		✓			
Overall rating about lecture and Training		✓			

Positive points about the Lecture:

* Easy to learn more difficult topics
* Gain knowledge about programming

Suggestions for improvement:

Principal,
Knowledge Institute of Technology
Kakapalayam (Po), Salem-637 504.

Hasini.

(Signature of the student)

KNOWLEDGE INSTITUTE OF TECHNOLOGY, SALEM.

Department of Computer Science and Engineering

FEEDBACK FORM

Type of Course: Certificate Course

Name of the Student: GOKUL S

Course Title: PRODUCT DEVELOPMENT AND PROGRAMMING USING E-BOX

Year/ Sem: III / 6

Dept : CSE

Date: 10.1.2019

Parameters	Please Tick mark on the appropriate box				
	Excellent (5)	Good (4)	Satisfactory (3)	Poor (2)	Very Poor (1)
Resource person knowledge on the Course			✓		
Course Delivery		✓			
Practical Experience		✓			
Additional resources available	✓				
Overall rating about lecture and Training		✓			

Positive points about the Lecture:

Gain more programming knowledge.

Get more industrial exposure

Suggestions for improvement:

Principal,
Knowledge Institute of Technology
Kakapalayam (Po), Salem-637 504

Gokul. S

(Signature of the student)

KNOWLEDGE INSTITUTE OF TECHNOLOGY, SALEM.

Department of Computer Science and Engineering

FEEDBACK FORM

Type of Course: Certificate Course

Name of the Student: Abarna . S

Course Title: Product Development and programming using E-box

Year/ Sem: III / 6

Dept : computer science and engineering **Date:** 10-1-2019

Parameters	Please Tick mark on the appropriate box				
	Excellent (5)	Good (4)	Satisfactory (3)	Poor (2)	Very Poor (1)
Resource person knowledge on the Course		✓			
Course Delivery			✓		
Practical Experience	✓				
Additional resources available		✓			
Overall rating about lecture and Training	✓				

Positive points about the Lecture:

had more exprence.

They taught with practical examples.

Suggestions for improvement:

Principal,
Knowledge Institute of Technology,
Kakapalayam (Po), Salem-637 504.

Abarna .S

(Signature of the student)

KNOWLEDGE INSTITUTE OF TECHNOLOGY, SALEM.

Department of Computer Science and Engineering

FEEDBACK FORM

Type of Course: Certificate Course

Name of the Student: V. Kanmani

Course Title: product development and programming using e-box

Year/ Sem: III / 06

Dept : CSE

Date: 10.01.2019

Parameters	Please Tick mark on the appropriate box				
	Excellent (5)	Good (4)	Satisfactory (3)	Poor (2)	Very Poor (1)
Resource person knowledge on the Course	✓				
Course Delivery		✓			
Practical Experience	✓				
Additional resources available		✓	✓		
Overall rating about lecture and Training	✓				

Positive points about the Lecture:

Get more industrial exposure during this program

Gained more knowledge in Real time Applications

Suggestions for improvement:

Principal,
Knowledge Institute of Technology
Kakapalayam (Po), Salem-637 504.

V. Kanmani

(Signature of the student)

KNOWLEDGE INSTITUTE OF TECHNOLOGY, SALEM – 637 504

Department of Computer Science and Engineering

REPORT OF THE EVENT			
Date	02.01.2019 - 09.01.2019	**Resource person**	Prof.K.Ravikumar, Assistant Professor, CSE, KIOT
Time	9.00am – 5.00pm	**Title**	Design and System Programming using E-Box
Venue	CC7 & CC8	**No. of Participants**	**46**

The Course Outcome are:

- Select appropriate data structures as applied to specified problem definition.
- Implement operations like searching, insertion, and deletion, traversing mechanism etc. on various data structures.
- Students will be able to implement linear and Non-Linear data structures.
- Implement appropriate sorting/searching technique for given problem.
- Design advance data structure using Non-Linear data structure.
- Determine and analyze the complexity of given Algorithms.

Encl: Circular / Brochure / Attendance Sheet

Principal,
Knowledge Institute of Technology
Kakapalayam (Po), Salem-637 504

KNOWLEDGE INSTITUTE OF TECHNOLOGY

(Approved by AICTE, New Delhi & Affiliated to Anna University, Chennai)

Design and System Programming using E-Box

Course Syllabus

Introduction to Abstract Data Types and analysis of different algorithms

- ✓ Review of elementary data types and structures in C. The Array data type and the importance of Random Access.
- ✓ Searching an array: linear and binary search. Sorting: Merge Sort, and analysis

ADT Array -- searching and sorting on arrays.

- ✓ Review of Pointers in C. The Linked list ADT.
- ✓ Searching a linked list, inserting and deleting from a linked list. Application: representing a univariate polynomial, and adding two univariate polynomials

ADT Linked Lists, Stacks, Queues.

- ✓ List manipulation algorithms: reversal of a list, use of recursion to reverse/search. Doubly linked lists, circular linked lists.
- ✓ Stack and Queue ADT, comparison of implementation using arrays and linked lists.

Binary Trees

- ✓ Tree ADT representation, traversal, application of binary trees in Huffman coding.
- ✓ Introduction to expression trees: Recursive traversal depth, height, and number of nodes. post/pre/infix notation.

Dictionary

- ✓ Binary search treessearch, insertion and deletion
- ✓ Balanced binary search trees.

ADT Priority queues

- ✓ Heap ADT implementation and Heapsort, in place sorting.
- ✓ Heaps for maintaining interval trees.

Graphs

- ✓ Representations or relations using matrices. The Graph ADT and applications
- ✓ Transitive closure, Flyod Warshall's algorithm and applications connectivity and spanning trees.

Advanced topics options for the teacher

- ✓ Adj. List representation of a Graph. Breadth First Search traversal and identification of shortest paths.
- ✓ Depth First Search recursive specification and application to finding articulation points.

Principal,
Knowledge Institute of Technology
Kakapalayam (Po), Salem-637 504

19.12.2018
Salem

From

Prof.R.Saranya,
Assistant Professor,
Department of Computer Science and Engineering
Knowledge Institute of Technology,
Salem- 637 504.

To

The Principal,
Knowledge Institute of Technology,
Salem- 637504.

Through,
Head of the Department/CSE

Respected Sir,

Subject: Requisition for Conducting Certification Course-Reg.

We have planned to conduct certification course on "Design and System Programming using E-Box" from 02.01.2019 - 09.01.2019 for a period of 06 days with the duration of 48 hours. This course will be helpful for the skill development and placement of our II year students. In this regard, we request you to endowment as permission to conduct the course.

The course details are as follows:

SL. NO.	NAME OF THE PROGRAM	VENUE DATE & TIME	RESOURCE PERSON
1	Certificate Course on Design and System Programming using E-Box	CC7, CC8 02.01.2019 -09.01.2019 & 9.00am – 5.00pm	**Prof . K.Ravikumar** Assistant Professor, Department of Computer Science and Engineering

Thank you,

Yours truly,

19/12/18

HOD/CSE

Principal,
Knowledge Institute of Technology
Kakapalayam (Po), Salem-637 504

PRINCIPAL

KNOWLEDGE INSTITUTE OF TECHNOLOGY, SALEM - 637 504			
CIRCULAR			
Circular No.	2018/CC/EVEN/04	**Date**	**24.12.2018**
To	All II Year Students		
Subject	Certificate Course on Design and System Programming using E-Box		
Circular issued by	Department of Computer Science and Engineering		

This is to inform you that Department of Computer Science and Engineering has planned to conduct a **CERTIFICATE COURSE** on **Design and System Programming using E-Box** in association with Amphisoft for ALL the II year students. Interested students are requested to register their names to the course In-charge.

SL. NO.	NAME OF THE PROGRAM	VENUE DATE & TIME	RESOURCE PERSON
1	Certificate Course on Design and System Programming using E-Box	CC7, CC8 02.01.2019 - 09.01.2019 & 9.00am – 5.00pm	**Prof . K.Ravikumar** Assistant Professor, Department of Computer Science and Engineering

Course Incharge: Prof. R.Saranya, Assistant Professor/CSE

24/12/18		
HOD/CSE		PRINCIPAL

MECH	VP Office	CIVIL	EEE	ECE	CSE	S&H	PD	LIB	EMS	AO	Transport I/C	Hostel NB	Director/ Training	Director/ Placement	Residential Warden		College NB	Office/ File	Class Circulation	Security Office	KBS	Reception
															LH	GH						
•	•	•	•	•	•								•	•				•	•			

Principal,
Knowledge Institute of Technology
Kakapalayam (Po), Salem-637 504

KNOWLEDGE INSITITE OF TECHNOLOGY,SALEM-637504

DEPARTMENT OF COMPUTER SCIENCE & ENGINEERING

Design and System Programming using E-Box

02.01.2019 -09.01.2019

Enrolled Student NameList

Sl.No	Year	Register Number	Student Name
1	II A	611217104001	AAKASH M C
2	II A	611217104003	AISHWARYA K
3	II A	611217104008	BHARATHY KANNAN M R
4	II A	611217104011	DARSHANA A
5	II A	611217104013	DEEPA K
6	II A	611217104016	DHANUSEYA M
7	II A	611217104017	DHARANIDHARAN M
8	II A	611217104019	DHIKSHA M P
9	II A	611217104020	DHILEEP N
10	II A	611217104023	DINESHKUMAR S
11	II A	611217104024	DIWAGAR S
12	II A	611217104026	ELANGO A
13	II A	611217104029	GOKULRAJ P
14	II A	611217104030	GOKULRAJAN M
15	II A	611217104031	GOUTHAM P
16	II A	611217104032	GOWTHAM G
17	II A	611217104034	HARI PRASANTH M
18	II A	611217104036	JAGADEEP T
19	II A	611217104037	JANANI B (02.03.2000)
20	II A	611217104039	KARTHIK T S
21	II A	611217104040	KAVIN SARVESH A
22	II A	611217104043	MANISH T
23	II A	611217104046	MITHILESH K S
24	II A	611217104048	MOHANAPRIYA K
25	II A	611217104049	MONIGA SAROJA E
26	II A	611217104051	MONISHKUMAR B
27	II A	611217104052	MURALI KRISHNAN M

Principal,
Knowledge Institute of Technology
Kakapalayam (Po), Salem-637 504

28	II A	611217104054	NAGAPRIYA N
29	II A	611217104056	NAVEENA M
30	II A	611217104057	PADMAVEERASHREE L
31	II B	611217104060	POOJA C
32	II B	611217104071	PRIYADHARSHNI A
33	II B	611217104072	PRIYADHARSHINI M
34	II B	611217104076	RAJAMANI G
35	II B	611217104079	ROOBAN KUMAR R
36	II B	611217104086	SANTHIYA G
37	II B	611217104088	SARAN S
38	II B	611217104090	SATHAPPAN M
39	II B	611217104094	SHWETHA S
40	II B	611217104099	SOUNDAR T
41	II B	611217104104	SOWNDHARYA S
42	II B	611217104106	SRI PAVISH U
43	II B	611217104108	SUBASH S
44	II B	611217104112	SURIYA M
45	II B	611217104113	SURYA GANESH H A
46	II B	611217104120	VIJAY S

21/1/19

Faculty Incharge

HOD

Principal,
Knowledge Institute of Technology,
Kakapalayam (Po), Salem-637 504.

KNOWLEDGE INSITITE OF TECHNOLOGY,SALEM-637504

DEPARTMENT OF COMPUTER SCIENCE & ENGINEERING

Design and System Programming using E-Box

SYLLABUS & SCHEDULE

Day	Session	Contents
DAY 1	FN	Introduction to Abstract Data Types and analysis of different algorithms
	AN	Searching an array: linear and binary search. Sorting: Merge Sort, and analysis
DAY 2	FN	ADT Array -- searching and sorting on arrays, Review of Pointers in C. The Linked list ADT.
	AN	ADT Linked Lists, Stacks, Queues, reverse/search. Doubly linked lists, circular linked lists.
DAY 3	FN	Stack and Queue ADT, comparison of implementation using arrays and linked lists
	AN	Binary Trees, Tree ADT representation, traversal, application of binary trees in Huffman coding.
DAY 4	FN	Expression trees: Recursive traversal depth, height, and number of nodes. post/pre/infix notation.
	AN	Dictionary, ADT Priority queues, Heap ADT implementation and Heapsort, in place sorting, Heaps for maintaining interval trees
DAY 5	FN	Graphs, matrices. The Graph ADT and applications
	AN	Flyod Warshall's algorithm and applications
DAY 6	FN	List representation of a Graph. Breadth First Search traversal and identification of shortest paths.
	AN	Depth First Search recursive specification and application to finding articulation points.

19/12/18
Course Cordinator

19/12/18
HOD

Principal,
Knowledge Institute of Technology
Kakapalayam (Po), Salem-637 504

KNOWLEDGE INSITITE OF TECHNOLOGY,SALEM-637504

DEPARTMENT OF COMPUTER SCIENCE & ENGINEERING

Design and System Programming using E-Box

02.01.2019 - 09.01.2019 | Course Attendance

Sl.No	Year	Register Number	Student Name	2.1.19	3.1.19	4.1.19	7.1.19	8.1.19	9.1.19
1	II A	611217104001	AAKASH M C	P	P	P	P	P	P
2	II A	611217104003	AISHWARYA K	P	P	P	P	P	P
3	II A	611217104008	BHARATHY KANNAN M R	P	P	P	P	P	P
4	II A	611217104011	DARSHANA A	P	P	A	P	P	P
5	II A	611217104013	DEEPA K	P	P	P	P	P	P
6	II A	611217104016	DHANUSEYA M	P	P	P	P	P	P
7	II A	611217104017	DHARANIDHARAN M	P	P	P	P	P	P
8	II A	611217104019	DHIKSHA M P	P	P	P	P	P	P
9	II A	611217104020	DHILEEP N	P	P	P	P	P	P
10	II A	611217104023	DINESHKUMAR S	P	P	P	P	P	P
11	II A	611217104024	DIWAGAR S	P	P	P	P	P	P
12	II A	611217104026	ELANGO A	P	P	P	P	P	P
13	II A	611217104029	GOKULRAJ P	A	P	P	P	P	P
14	II A	611217104030	GOKULRAJAN M	P	P	P	P	P	P
15	II A	611217104031	GOUTHAM P	P	P	P	P	A	P
16	II A	611217104032	GOWTHAM G	P	P	P	P	P	P
17	II A	611217104034	HARI PRASANTH M	P	P	P	P	P	P
18	II A	611217104036	JAGADEEP T	P	P	P	P	P	P
19	II A	611217104037	JANANI B (02.03.2000)	P	P	P	P	P	P
20	II A	611217104039	KARTHIK T S	P	P	P	P	P	P
21	II A	611217104040	KAVIN SARVESH A	P	P	P	P	P	P
22	II A	611217104043	MANISH T	P	P	P	P	P	P
23	II A	611217104046	MITHILESH K S	P	P	P	P	P	P
24	II A	611217104048	MOHANAPRIYA K	P	P	P	P	P	P
25	II A	611217104049	MONIGA SAROJA E	P	P	P	P	P	P
26	II A	611217104051	MONISHKUMAR B	P	P	P	P	P	P
27	II A	611217104052	MURALI KRISHNAN M	P	P	P	P	P	P
28	II A	611217104054	NAGAPRIYA N	P	P	P	P	P	P
29	II A	611217104056	NAVEENA M	P	P	P	P	P	P
30	II A	611217104057	PADMAVEERASHREE L	P	P	P	P	P	P
31	II B	611217104060	POOJA C	P	P	P	P	P	A

Principal,
Knowledge Institute of Technology
Kakapalayam (Po), Salem-637 504

32	II B	611217104071	PRIYADHARSHNI A						
33	II B	611217104072	PRIYADHARSHINI M						
34	II B	611217104076	RAJAMANI G						
35	II B	611217104079	ROOBAN KUMAR R						
36	II B	611217104086	SANTHIYA G						
37	II B	611217104088	SARAN S						
38	II B	611217104090	SATHAPPAN M						
39	II B	611217104094	SHWETHA S						
40	II B	611217104099	SOUNDAR T						
41	II B	611217104104	SOWNDHARYA S						
42	II B	611217104106	SRI PAVISH U						
43	II B	611217104108	SUBASH S						
44	II B	611217104112	SURIYA M						
45	II B	611217104113	SURYA GANESH H A						
46	II B	611217104120	VIJAY S						
No. of Students Present				45	45	45	46	44	45
No of Students Absent				01	01	01	—	02	01

Faculty Incharge

HOD

Principal,
Knowledge Institute of Technology
Kakapalayam (Po), Salem-637 504.

KNOWLEDGE INSTITUTE OF TECHNOLOGY,SALEM-637504

DEPARTMENT OF COMPUTER SCIENCE & ENGINEERING

Design and System Programming using E-Box

02.01.2019 - 09.01.2019 | Assessment Report

Sl.No	Year	Register Number	Student Name	Final Assessment %
1	II A	611217104001	AAKASH M C	61
2	II A	611217104003	AISHWARYA K	74
3	II A	611217104008	BHARATHY KANNAN M R	76
4	II A	611217104011	DARSHANA A	61
5	II A	611217104013	DEEPA K	61
6	II A	611217104016	DHANUSEYA M	80
7	II A	611217104017	DHARANIDHARAN M	83
8	II A	611217104019	DHIKSHA M P	68
9	II A	611217104020	DHILEEP N	63
10	II A	611217104023	DINESHKUMAR S	64
11	II A	611217104024	DIWAGAR S	69
12	II A	611217104026	ELANGO A	84
13	II A	611217104029	GOKULRAJ P	62
14	II A	611217104030	GOKULRAJAN M	74
15	II A	611217104031	GOUTHAM P	73
16	II A	611217104032	GOWTHAM G	84
17	II A	611217104034	HARI PRASANTH M	64
18	II A	611217104036	JAGADEEP T	74
19	II A	611217104037	JANANI B (02.03.2000)	72
20	II A	611217104039	KARTHIK T S	83
21	II A	611217104040	KAVIN SARVESH A	70
22	II A	611217104043	MANISH T	68
23	II A	611217104046	MITHILESH K S	73
24	II A	611217104048	MOHANAPRIYA K	79
25	II A	611217104049	MONIGA SAROJA E	75
26	II A	611217104051	MONISHKUMAR B	68
27	II A	611217104052	MURALI KRISHNAN M	70
28	II A	611217104054	NAGAPRIYA N	67
29	II A	611217104056	NAVEENA M	82

Principal,
Knowledge Institute of Technology
Kakapalayam (Po), Salem-637 504

30	II A	611217104057	PADMAVEERASHREE L	70
31	II B	611217104060	POOJA C	64
32	II B	611217104071	PRIYADHARSHNI A	66
33	II B	611217104072	PRIYADHARSHINI M	83
34	II B	611217104076	RAJAMANI G	69
35	II B	611217104079	ROOBAN KUMAR R	65
36	II B	611217104086	SANTHIYA G	60
37	II B	611217104088	SARAN S	69
38	II B	611217104090	SATHAPPAN M	68
39	II B	611217104094	SHWETHA S	83
40	II B	611217104099	SOUNDAR T	62
41	II B	611217104104	SOWNDHARYA S	70
42	II B	611217104106	SRI PAVISH U	63
43	II B	611217104108	SUBASH S	68
44	II B	611217104112	SURIYA M	71
45	II B	611217104113	SURYA GANESH H A	75
46	II B	611217104120	VIJAY S	63

**Max Marks - 100 | Min Marks - 60

Faculty Incharge

HOD

Principal,
Knowledge Institute of Technology,
Kakapalayam (Po), Salem-637 504.

eBOX
AN AMPHISOFT PRODUCT

CERTIFICATE

OF COMPLETION

This is to certify that **AISHWARYA K**, **Knowledge Institute of Technology, Salem** , has sucessfully completed the certificate course on **Design and System Programming using E-Box** during **02.01.2019 - 09.01.2019**.

amphisoft

Principal,
Knowledge Institute of Technology
Kakapalayam (Po), Salem-637 504

T.P

Mrs. Punitha Pradeep
Founder & Director

CERTIFICATE

OF COMPLETION

This is to certify that **DHARANIDHARAN M**, **Knowledge Institute of Technology, Salem ,** has sucessfully completed the certificate course on **Design and System Programming using E-Box** during **02.01.2019 - 09.01.2019**.

amphisoft

Principal,
Knowledge Institute of Technology,
Kakapalayam (Po), Salem-637 504.

Mrs. Punitha Pradeep
Founder & Director

CERTIFICATE

OF COMPLETION

This is to certify that **GOKULRAJAN M**, **Knowledge Institute of Technology, Salem** , has sucessfully completed the certificate course on **Design and System Programming using E-Box** during **02.01.2019 - 09.01.2019**.

amphisoft

Principal,
Knowledge Institute of Technology
Kakapalayam (Po), Salem-637 504

Mrs. Punitha Pradeep
Founder & Director

EBOX
AN AMPHISOFT PRODUCT

CERTIFICATE

OF COMPLETION

This is to certify that **MANISH T**, **Knowledge Institute of Technology, Salem ,** has sucessfully completed the certificate course on **Design and System Programming using E-Box** during **02.01.2019 - 09.01.2019**.

amphisoft

Principal,
Knowledge Institute of Technology
Kakapalayam (Po), Salem-637 504

Mrs. Punitha Pradeep
Founder & Director

eBOX
AN AMPHISOFT PRODUCT

CERTIFICATE

OF COMPLETION

This is to certify that **MURALI KRISHNAN M**, **Knowledge Institute of Technology, Salem ,** has sucessfully completed the certificate course on **Design and System Programming using E-Box** during **02.01.2019 - 09.01.2019**.

amphisoft

Principal,
Knowledge Institute of Technology
Kakapalayam (Po), Salem-637 504

Mrs. Punitha Pradeep
Founder & Director

KNOWLEDGE INSTITUTE OF TECHNOLOGY, SALEM.

Department of Computer Science and Engineering

FEEDBACK FORM

Type of Course: Certificate Course

Name of the Student: Gowtham. G

Course Title: Design And System Programming using E-box

Year/ Sem: II / IV

Dept : CSE

Date: 09/01/19

Parameters	Please Tick mark on the appropriate box				
	Excellent (5)	Good (4)	Satisfactory (3)	Poor (2)	Very Poor (1)
Resource person knowledge on the Course	✓				
Course Delivery		✓			
Practical Experience	✓				
Additional resources available			✓		
Overall rating about lecture and Training		✓			

Positive points about the Lecture:

The Presentation used is satisfactory. It is Good for understanding the concepts.

Suggestions for improvement:

—

Principal,
Knowledge Institute of Technology
Kakapalayam (Po), Salem-637 504

Gowtham. G

(Signature of the student)

KNOWLEDGE INSTITUTE OF TECHNOLOGY, SALEM.

Department of Computer Science and Engineering

FEEDBACK FORM

Type of Course: Certificate Course

Name of the Student: VIJAY S

Course Title: DESIGN AND SYSTEM PROGRAMMING USING E-BOX

Year/ Sem: II / 04

Date: 9/11/19

Dept : CSE

Parameters	Please Tick mark on the appropriate box				
	Excellent (5)	Good (4)	Satisfactory (3)	Poor (2)	Very Poor (1)
Resource person knowledge on the Course	✓				
Course Delivery		✓			
Practical Experience	✓				
Additional resources available		✓			
Overall rating about lecture and Training	✓				

Positive points about the Lecture:

-

Suggestions for improvement:

Give more problems to solve.

Principal,
Knowledge Institute of Technology
Kakapalayam (Po), Salem-637 504.

Vijay S

(Signature of the student)

KNOWLEDGE INSTITUTE OF TECHNOLOGY, SALEM.

Department of Computer Science and Engineering

FEEDBACK FORM

Type of Course: Certificate Course

Name of the Student: Manish T

Course Title: Design and System programming using E-box

Year/ Sem: IV / 04

Dept : CSE

Date: 9/1/19

Parameters	Please Tick mark on the appropriate box				
	Excellent (5)	Good (4)	Satisfactory (3)	Poor (2)	Very Poor (1)
Resource person knowledge on the Course	✓				
Course Delivery		✓			
Practical Experience			✓		
Additional resources available	✓				
Overall rating about lecture and Training		✓			

Positive points about the Lecture:

Good and easy to understand.

Suggestions for improvement:

Principal,
Knowledge Institute of Technology
Kakapalayam (Po), Salem-637 504

Manisha T

(Signature of the student)

KNOWLEDGE INSTITUTE OF TECHNOLOGY, SALEM.

Department of Computer Science and Engineering

FEEDBACK FORM

Type of Course: Certificate Course

Name of the Student: Dharshana.A

Course Title: design and system programming using C-box

Year/ Sem: II / IV

Dept : CSE

Date: 9/1/19

Parameters	Please Tick mark on the appropriate box				
	Excellent (5)	Good (4)	Satisfactory (3)	Poor (2)	Very Poor (1)
Resource person knowledge on the Course		✓			
Course Delivery	✓				
Practical Experience		✓			
Additional resources available	✓				
Overall rating about lecture and Training		✓			

Positive points about the Lecture:

examples are good

Suggestions for improvement:

Principal,
Knowledge Institute of Technology
Kakapalayam (Po), Salem-637 504

(Signature of the student)

KNOWLEDGE INSTITUTE OF TECHNOLOGY, SALEM.

Department of Computer Science and Engineering

FEEDBACK FORM

Type of Course: Certificate Course

Name of the Student: Deepa K

Course Title: Design and system Programming Using E-box

Year/ Sem: II / IV

Dept : CSE

Date: 9/1/19

Parameters	Please Tick mark on the appropriate box				
	Excellent (5)	Good (4)	Satisfactory (3)	Poor (2)	Very Poor (1)
Resource person knowledge on the Course	✓				
Course Delivery		✓			
Practical Experience	✓				
Additional resources available			✓		
Overall rating about lecture and Training		✓			

Positive points about the Lecture:

Easy to Understand

Suggestions for improvement:

Principal,
Knowledge Institute of Technology
Kakapalayam (Po), Salem-637 504

Deepa K

(Signature of the student)

18-19

KNOWLEDGE INSTITUTE OF TECHNOLOGY, SALEM – 637 504

Department of Computer Science and Engineering

REPORT OF THE EVENT

Date	03.09.2018 - 14.09.2018	**Resource person**	Prof. C.Vanitha, Assistant Professor, CSE, KIOT
Time	9.00pm – 5.00pm	**Title**	Database Design and Programming with SQL using Oracle iLearning
Venue	CC 11 & 12	**No. of Participants**	**64**

- This course engages students to analyze complex business scenarios and create a data model—a conceptual representation of an organization's information.
- Participants implement their database design by creating a physical database using SQL. Basic SQL syntax and the rules for constructing valid SQL statements are reviewed.
- This course culminates with a project that challenges students to design, implement, and demonstrate a database solution for a business or organization.
- The Students are learned the techniques and tools to design, guild and extract information from a database, also improved the basic mathematical, logical, and analytical problem-solving skills.

Encl: Circular / Brochure / Attendance Sheet

Principal,
Knowledge Institute of Technology,
Kakapalayam (Po), Salem-637 504

Database Design and Programming with SQL – Course Description

Overview

This course engages students to analyze complex business scenarios and create a data model—a conceptual representation of an organization's information. Participants implement their database design by creating a physical database using SQL. Basic SQL syntax and the rules for constructing valid SQL statements are reviewed. This course culminates with a project that challenges students to design, implement, and demonstrate a database solution for a business or organization.

Duration

- Total Course Time: 60 hours*

Target Audience - Students

- Students who wish to learn the techniques and tools to design, guild and extract information from a database
- Students who possess basic mathematical, logical, and analytical problem-solving skills
- Novice programmers, as well as those at advanced levels, to learning the SQL Programming language to an advanced level

Prerequisites

Required

- Ease with using a computer
- General knowledge of databases and query activity

Suggested

- None

Suggested Next Courses

- Database Programming with PL/SQL

Lesson-by-Lesson Topics

Database Design

Introduction
- Introduction to the Oracle Academy
- Data vs. Information
- History of the Database
- Major Transformations in Computing

Entities and Attributes
- Conceptual and Physical Models
- Entities, Instances, Attributes, and Identifiers
- Entity Relationship Modeling and ERDs

Relationship Basics
- Identifying Relationships
- ER Diagramming Conventions
- Speaking ERDish & Drawing Relationships
- Matrix Diagrams

Super/Sub Types and Business Rules
- Supertypes and Subtypes
- Documenting Business Rules

Relationship Fundamentals
- Relationship Transferability
- Relationship Types
- Resolving Many-to-Many Relationships
- Understanding CRUD Requirements

UIDs and Normalization
- Artificial, Composite, and Secondary UIDs
- Normalization and First Normal Form
- Second Normal Form
- Third Normal Form

Arcs, Hierarchies, and Recursive Modeling
- Arcs
- Hierarchies and Recursive Relationships

Changes and Historical Modeling
- Modeling Historical Data
- Modeling Change: Time
- Modeling Change: Price
- Drawing Conventions for Readability

Mapping
- Introduction to Relational Database Concepts
- Basic Mapping: The Transformation Process

Principal,
Knowledge Institute of Technology
Kakapalayam (Po), Salem-637 504

21.08.2018
Salem

From

Prof.R.Saranya,
Assistant Professor,
Department of Computer Science and Engineering
Knowledge Institute of Technology,
Salem- 637 504.

To

The Principal,
Knowledge Institute of Technology,
Salem- 637504.

Through,
Head of the Department/CSE

Respected Sir,

Subject: Requisition for Conducting Certification Course-Reg.

We have planned to conduct certification course on "Database Design and Programming with SQL using Oracle iLearning" from 03.09.2018 - 14.09.2018 for a period of 10 days with the duration of 60 hours. This course will be helpful for the skill development and placement of our IV year students. In this regard, we request you to endowment as permission to conduct the course.

The course details are as follows:

SL. NO.	NAME OF THE PROGRAM	VENUE DATE & TIME	RESOURCE PERSON
1	Certificate Course on Database Design and Programming with SQL	CC 11, CC 12 03.09.2018 - 14.09.2018 & 9.00am – 5.00pm	**Prof.C.Vanitha,** Assistant Professor, Department of Computer Science and Engineering

Thank you,

Yours truly,

21/8/18

21/8/18

HOD/CSE

PRINCIPAL

Principal,
Knowledge Institute of Technology
Kakapalayam (Po), Salem-637 504

KNOWLEDGE INSTITUTE OF TECHNOLOGY, SALEM - 637 504			
CIRCULAR			
Circular No.	2018/CC/ODD/03	**Date**	**27.08.2018**
To	All IV Year Students		
Subject	Certificate Course on Database Design and Programming with SQL		
Circular issued by	Department of Computer Science and Engineering		

This is to inform you that Department of Computer Science and Engineering in association with Oracle Academy has planned to conduct a **CERTIFICATE COURSE** on **Database Design and Programming with SQL** for ALL the IV year students of circuit branches. Interested students are requested to register their names to the course In-charge.

SL. NO.	NAME OF THE PROGRAM	VENUE DATE & TIME	RESOURCE PERSON
1	Certificate Course on Database Design and Programming with SQL	CC 11, CC 12 03.09.2018 - 14.09.2018 & 9.00am – 5.00pm	**Prof.C.Vanitha,** Assistant Professor, Department of Computer Science and Engineering

Course Incharge: Prof. R.Saranya, Assistant Professor/CSE

27.08.18		
HOD/CSE		PRINCIPAL

MECH	VP Office	CIVIL	EEE	ECE	CSE	S&H	PD	LIB	EMS	AO	Transport I/C	Hostel NB	Director/Training	Director/Placement	Residential Warden		College NB	Office/File	Class Circulation	Security Office	KBS	Reception
															LH	GH						
*	*	*	*	*	*								*	*				*				

Principal,
Knowledge Institute of Technology
Kakapalayam (Po), Salem-637 504

KNOWLEDGE INSITITE OF TECHNOLOGY,SALEM-637504

DEPARTMENT OF COMPUTER SCIENCE & ENGINEERING

Database Design and Programming with SQL using Oracle iLearning

03.09.2018 -14.09.2018

Enrolled Student NameList

Sl.No	Year	Register Number	Student Name
1	IV A	611215104001	ABINAYA.S
2	IV A	611215104003	AJITH.M
3	IV A	611215104008	BALAJI.G
4	IV A	611215104011	DEEPAN NAGARAJAN.B
5	IV A	611215104013	DIVVYA DEVI.M
6	IV A	611215104014	DIVYA.S
7	IV A	611215104015	DURAI SHRI DHARSHAN.R
8	IV A	611215104016	ELAMPARITHY.M
9	IV A	611215104017	FOUZIYA ISRATH.S
10	IV A	611215104018	GANGA SREE.K.M
11	IV A	611215104019	GAYATHRI.C.S
12	IV A	611215104021	GEETHANJHALI.R
13	IV A	611215104023	GOKUL KRISHNA.M
14	IV A	611215104024	GOKUL RAJAN.M
15	IV A	611215104026	HARINI.M
16	IV A	611215104027	HARINI.S
17	IV A	611215104030	HEMALATHA.S
18	IV A	611215104034	KARTHICK.K
19	IV A	611215104035	KAVIN.M
20	IV A	611215104036	KAVIPRIYA.G
21	IV A	611215104039	KISHORE KUMAR.K
22	IV A	611215104040	KOUSHIKAA.P
23	IV A	611215104046	LOGASHREE.S
24	IV A	611215104049	MONICA.R
25	IV A	611215104052	NAGAJANANI.S
26	IV A	611215104053	NAGASURYA.R
27	IV A	611215104058	PAVITHRA.S
28	IV A	611215104059	PAVITHRA.S
29	IV A	611215104063	PRATHEEBA.D
30	IV A	611215104064	PRAVEEN KUMAR.B
31	IV A	611215104068	PRIYANKA.M
32	IV A	611215104069	RAGHURAM.M
33	IV A	611215104071	RAMYA.S

Principal,
Knowledge Institute of Technology
Kakapalayam (Po), Salem-637 504

34	IV A	611215104075	REVANTH.N
35	IV A	611215104077	SAI RAMYA.K
36	IV A	611215104078	SALMAN.A
37	IV A	611215104079	SAMPATH KUMAR.A
38	IV A	611215104082	SARATHKUMAR.S
39	IV A	611215104087	SOWMIYA.E
40	IV A	611215104088	SOWMIYA.J
41	IV A	611215104090	SOWMYA.S
42	IV A	611215104091	SREEJHA.G.K
43	IV A	611215104093	SRILALITHAGAYATHRI.V
44	IV A	611215104094	SRI SAMPOORANI.O
45	IV A	611215104098	TAMILARASI.G
46	IV A	611215104099	THAMANIPRIYA.C
47	IV A	611215104100	VARSHA.R
48	IV A	611215104101	VARSSINI.K
49	IV A	611215104102	VEDA MEENA.D
50	IV A	611215104104	VIMALAN.M
51	IV A	611215104105	VINITHA DEVI.Y
52	IV A	611215104107	YATHISH.S
53	IV A	611215104301	ANANTH S
54	IV A	611215104701	SRINIVASAN M
55	IV A	611215104029	HARI PRIYA.R
56	IV A	611215104061	PRAGATHI.S
57	IV B	611215104009	BHARATHI.G
58	IV B	611215104012	DEEPAPRIYA.V
59	IV B	611215104025	HARINI.M
60	IV B	611215104048	MOHAMED SHAGUL HAMEED.M
61	IV B	611215104106	VISHNULAL.M
62	IV B	611215104032	JAMUNASRI.K
63	IV B	611215104033	KARTHI.M
64	IV B	611215104076	REVATHI.B

8/9/18

Faculty Incharge

HOD

Principal,
Knowledge Institute of Technology
Kakapalayam (Po), Salem-637 504

KNOWLEDGE INSITITE OF TECHNOLOGY,SALEM-637504

DEPARTMENT OF COMPUTER SCIENCE & ENGINEERING

Certificate Course on Database Design and Programming with SQL

SYLLABUS & SCHEDULE

Day	Session	Contents
DAY 1	FN & AN	Database Design, Introduction, Entities and Attributes,
DAY 2	FN & AN	Super/Sub Types and Business Rules, Relationship Fundamentals, UIDs and Normalization
DAY 3	FN & AN	Arcs, Hierarchies, and Recursive Modeling, Changes and Historical Modeling
DAY 4	FN & AN	Mapping, Creating Database Projects
DAY 5	FN & AN	Presenting Database Projects, Database Programming with SQL - Introduction
DAY 6	FN & AN	SELECT and WHERE, WHERE, ORDER BY, and Intro to Functions
DAY 7	FN & AN	Single Row Functions , JOINs
DAY 8	FN & AN	Group Functions, Subqueries, DML
DAY 9	FN & AN	DDL, Constraints, Views, Sequences and Synonyms,
DAY 10	FN & AN	Privileges and Regular Expressions, TCL

21/8/18

Course Cordinator

21.8.18

HOD

Principal,
Knowledge Institute of Technology
Kakapalayam (Po), Salem-637 504

KNOWLEDGE INSITITE OF TECHNOLOGY,SALEM-637504

DEPARTMENT OF COMPUTER SCIENCE & ENGINEERING

Database Design and Programming with SQL using Oracle iLearning

03.09.2018 - 14.09.2018 | Course Attendance

Sl.No	Year	Register Number	Student Name	3.9.18	4.9.18	5.9.18	6.9.18	7.9.18	10.9.18	11.9.18	12.9.18	13.9.18	14.9.18
1	IV A	611215104001	ABINAYA.S	1	1	1	1	1	1	1	1	1	1
2	IV A	611215104003	AJITH.M	1	1	1	1	1	1	1	1	1	1
3	IV A	611215104008	BALAJI.G	1	1	1	1	1	1	1	1	1	1
4	IV A	611215104011	DEEPAN NAGARAJAN.B	1	1	1	1	1	1	1	1	1	1
5	IV A	611215104013	DIVVYA DEVI.M	1	1	1	1	1	1	1	1	1	1
6	IV A	611215104014	DIVYA.S	1	1	1	1	1	1	1	1	1	1
7	IV A	611215104015	DURAI SHRI DHARSHAN.R	1	1	1	1	1	1	1	1	1	1
8	IV A	611215104016	ELAMPARITHY.M	1	1	1	1	1	1	1	1	1	1
9	IV A	611215104017	FOUZIYA ISRATH.S	1	1	1	1	1	1	1	1	1	1
10	IV A	611215104018	GANGA SREE.K.M	1	1	1	1	1	1	1	1	1	1
11	IV A	611215104019	GAYATHRI.C.S	1	1	1	1	1	1	1	1	1	1
12	IV A	611215104021	GEETHANJHALI.R	1	1	1	1	1	1	1	1	1	1
13	IV A	611215104023	GOKUL KRISHNA.M	1	1	1	1	1	1	1	1	1	1
14	IV A	611215104024	GOKUL RAJAN.M	1	1	1	1	1	1	1	1	1	1
15	IV A	611215104026	HARINI.M	1	1	1	1	1	1	1	1	1	1
16	IV A	611215104027	HARINI.S	1	1	1	1	1	1	1	1	1	1
17	IV A	611215104030	HEMALATHA.S	1	1	1	1	1	1	1	1	1	1
18	IV A	611215104034	KARTHICK.K	1	1	1	1	1	1	1	1	1	1
19	IV A	611215104035	KAVIN.M	1	1	1	1	1	1	1	1	1	1
20	IV A	611215104036	KAVIPRIYA.G	1	1	1	1	1	1	1	1	1	1
21	IV A	611215104039	KISHORE KUMAR.K	1	1	1	1	1	1	1	1	1	1
22	IV A	611215104040	KOUSHIKAA.P	1	1	1	1	1	1	1	1	1	1
23	IV A	611215104046	LOGASHREE.S	1	1	1	1	1	1	1	1	1	1
24	IV A	611215104049	MONICA.R	1	1	1	1	1	1	1	1	1	1

Principal,
Knowledge Institute of Technol...
Kakapalayam (Po), Salem-637 5...

25	IV A	611215104052	NAGAJANANI.S										
26	IV A	611215104053	NAGASURYA.R										
27	IV A	611215104058	PAVITHRA.S										
28	IV A	611215104059	PAVITHRA.S										
29	IV A	611215104063	PRATHEEBA.D										
30	IV A	611215104064	PRAVEEN KUMAR.B										
31	IV A	611215104068	PRIYANKA.M										
32	IV A	611215104069	RAGHURAM.M										
33	IV A	611215104071	RAMYA.S										
34	IV A	611215104075	REVANTH.N										
35	IV A	611215104077	SAI RAMYA.K										
36	IV A	611215104078	SALMAN.A										
37	IV A	611215104079	SAMPATH KUMAR.A										
38	IV A	611215104082	SARATHKUMAR.S										
39	IV A	611215104087	SOWMIYA.E										
40	IV A	611215104088	SOWMIYA.J										
41	IV A	611215104090	SOWMYA.S										
42	IV A	611215104091	SREEJHA.G.K										
43	IV A	611215104093	SRILALITHAGAYATHRI.V										
44	IV A	611215104094	SRI SAMPOORANI.O										
45	IV A	611215104098	TAMILARASI.G										
46	IV A	611215104099	THAMANIPRIYA.C										
47	IV A	611215104100	VARSHA.R										
48	IV A	611215104101	VARSSINI.K										
49	IV A	611215104102	VEDA MEENA.D										
50	IV A	611215104104	VIMALAN.M										
51	IV A	611215104105	VINITHA DEVI.Y										
52	IV A	611215104107	YATHISH.S										
53	IV A	611215104301	ANANTH S										
54	IV A	611215104701	SRINIVASAN M										

Principal,
Knowledge Institute of Technology
Kakapalayam (Po), Salem-637 504

55	IV A	611215104029	HARI PRIYA.R	1	1	1	1	1	1	1	1	1	1	1	1
56	IV A	611215104061	PRAGATHI.S	1	a	1	1	1	1	1	1	1	1	1	1
57	IV B	611215104009	BHARATHI.G	1	1	1	1	1	1	1	1	1	1	1	1
58	IV B	611215104012	DEEPAPRIYA.V	1	1	1	1	1	a	1	1	1	1	1	1
59	IV B	611215104025	HARINI.M	1	1	1	1	1	1	1	1	1	1	1	1
60	IV B	611215104048	MOHAMED SHAGUL HAMEED.M	1	1	1	1	1	1	1	1	1	1	1	1
61	IV B	611215104106	VISHNULAL.M	1	1	1	1	1	1	1	1	1	1	1	1
62	IV B	611215104032	JAMUNASRI.K	1	1	1	1	1	1	1	1	1	1	1	1
63	IV B	611215104033	KARTHI.M	1	1	1	1	1	1	1	1	1	1	1	1
64	IV B	611215104076	REVATHI.B	1	1	1	1	1	1	1	1	1	1	1	a
			No. of Students Present	63	61	63	64	63	61	64	63	64	63
			No of Students Absent	01	03	01	—	01	03	—	01	—	01

14/9/18

Faculty Incharge

14/9/18

HOD

Principal
Knowledge Institute of Technology
Kakapalayam (Po), Salem-637 504

KNOWLEDGE INSTITUTE OF TECHNOLOGY,SALEM-637504

DEPARTMENT OF COMPUTER SCIENCE & ENGINEERING

Database Design and Programming with SQL using Oracle iLearning

19.09.2018 | Assessment Report

Sl.No	Year	Register Number	Student Name	Final Assessment %
1	IV A	611215104001	ABINAYA.S	73
2	IV A	611215104003	AJITH.M	61
3	IV A	611215104008	BALAJI.G	78
4	IV A	611215104011	DEEPAN NAGARAJAN.B	77
5	IV A	611215104013	DIVVYA DEVI.M	58
6	IV A	611215104014	DIVYA.S	72
7	IV A	611215104015	DURAI SHRI DHARSHAN.R	82
8	IV A	611215104016	ELAMPARITHY.M	75
9	IV A	611215104017	FOUZIYA ISRATH.S	80
10	IV A	611215104018	GANGA SREE.K.M	69
11	IV A	611215104019	GAYATHRI.C.S	81
12	IV A	611215104021	GEETHANJHALI.R	85
13	IV A	611215104023	GOKUL KRISHNA.M	82
14	IV A	611215104024	GOKUL RAJAN.M	63
15	IV A	611215104026	HARINI.M	79
16	IV A	611215104027	HARINI.S	61
17	IV A	611215104030	HEMALATHA.S	81
18	IV A	611215104034	KARTHICK.K	81
19	IV A	611215104035	KAVIN.M	76
20	IV A	611215104036	KAVIPRIYA.G	86
21	IV A	611215104039	KISHORE KUMAR.K	65
22	IV A	611215104040	KOUSHIKAA.P	67
23	IV A	611215104046	LOGASHREE.S	82
24	IV A	611215104049	MONICA.R	86
25	IV A	611215104052	NAGAJANANI.S	71
26	IV A	611215104053	NAGASURYA.R	74
27	IV A	611215104058	PAVITHRA.S	84
28	IV A	611215104059	PAVITHRA.S	77
29	IV A	611215104063	PRATHEEBA.D	65
30	IV A	611215104064	PRAVEEN KUMAR.B	71
31	IV A	611215104068	PRIYANKA.M	83
32	IV A	611215104069	RAGHURAM.M	69

Principal,
Knowledge Institute of Technology
Kakapalayam (Po), Salem-637 504

33	IV A	611215104071	RAMYA.S	62
34	IV A	611215104075	REVANTH.N	80
35	IV A	611215104077	SAI RAMYA.K	67
36	IV A	611215104078	SALMAN.A	78
37	IV A	611215104079	SAMPATH KUMAR.A	69
38	IV A	611215104082	SARATHKUMAR.S	69
39	IV A	611215104087	SOWMIYA.E	66
40	IV A	611215104088	SOWMIYA.J	57
41	IV A	611215104090	SOWMYA.S	74
42	IV A	611215104091	SREEJHA.G.K	55
43	IV A	611215104093	SRILALITHAGAYATHRI.V	76
44	IV A	611215104094	SRI SAMPOORANI.O	72
45	IV A	611215104098	TAMILARASI.G	73
46	IV A	611215104099	THAMANIPRIYA.C	80
47	IV A	611215104100	VARSHA.R	85
48	IV A	611215104101	VARSSINI.K	69
49	IV A	611215104102	VEDA MEENA.D	61
50	IV A	611215104104	VIMALAN.M	76
51	IV A	611215104105	VINITHA DEVI.Y	65
52	IV A	611215104107	YATHISH.S	69
53	IV A	611215104301	ANANTH S	79
54	IV A	611215104701	SRINIVASAN M	80
55	IV A	611215104029	HARI PRIYA.R	66
56	IV A	611215104061	PRAGATHI.S	86
57	IV B	611215104009	BHARATHI.G	64
58	IV B	611215104012	DEEPAPRIYA.V	75
59	IV B	611215104025	HARINI.M	62
60	IV B	611215104048	MOHAMED SHAGUL HAMEED.M	59
61	IV B	611215104106	VISHNULAL.M	68
62	IV B	611215104032	JAMUNASRI.K	65
63	IV B	611215104033	KARTHI.M	64
64	IV B	611215104076	REVATHI.B	63

**Max Marks - 100 | Min Marks - 50

19/9/18

Faculty Incharge

Principal,
Knowledge Institute of Technology
Kakapalayam (Po), Salem-637 504

19/9/18

HOD

ORACLE ACADEMY

AWARD *of* ACHIEVEMENT

PRESENTED TO

DIVVYA DEVI.M

FOR SUCCESSFULLY COMPLETING THE ORACLE ACADEMY

Database Design and Programming with SQL

FINAL EXAM

19-Sep-2018

Oracle Academy Instructor

Principal,
Knowledge Institute of Technology
Kakapalayam (Po), Salem-637 504

ORACLE ACADEMY

AWARD *of* ACHIEVEMENT

PRESENTED TO

DIVYA.S

FOR SUCCESSFULLY COMPLETING THE ORACLE ACADEMY

Database Design and Programming with SQL

FINAL EXAM

19-Sep-2018

Oracle Academy Instructor

Principal,
Knowledge Institute of Technology
Kakapalayam (Po), Salem-637 504

ORACLE ACADEMY

AWARD *of* ACHIEVEMENT

PRESENTED TO

DURAI SHRI DHARSHAN.R

FOR SUCCESSFULLY COMPLETING THE ORACLE ACADEMY

Database Design and Programming with SQL

FINAL EXAM

19-Sep-2018

Oracle Academy Instructor

Principal,
Knowledge Institute of Technology,
Kakapalayam (Po), Salem-637 504.

ORACLE ACADEMY

AWARD *of* ACHIEVEMENT

PRESENTED TO

FOUZIYA ISRATH.S

FOR SUCCESSFULLY COMPLETING THE ORACLE ACADEMY

Database Design and Programming with SQL

FINAL EXAM

19-Sep-2018

Oracle Academy Instructor

Principal,
Knowledge Institute of Technology
Kakapalayam (Po), Salem-637 504.

KNOWLEDGE INSTITUTE OF TECHNOLOGY, SALEM.

Department of Computer Science and Engineering

FEEDBACK FORM

Type of Course: Certificate Course

Name of the Student: Kavin.M

Course Title: Database design and programming with SQL using oracle Pl/sql

Year/ Sem: IV / 07

Dept : CSE

Date: 14.9.2018

Parameters	Please Tick mark on the appropriate box				
	Excellent (5)	Good (4)	Satisfactory (3)	Poor (2)	Very Poor (1)
Resource person knowledge on the Course	—				
Course Delivery		—			
Practical Experience		—			
Additional resources available	—				
Overall rating about lecture and Training		—			

Positive points about the Lecture:

→ Execution of more query

→ Explained more topics with example

Suggestions for improvement:

—

Principal,
Knowledge Institute of Technology,
Kakapalayam (Po), Salem-637 504.

Kavin. M

(Signature of the student)

KNOWLEDGE INSTITUTE OF TECHNOLOGY, SALEM.

Department of Computer Science and Engineering

FEEDBACK FORM

Type of Course: Certificate Course

Name of the Student: Gokul Krishna . M

Course Title: Database Design and programming with SQL using oracle Hamli

Year/ Sem: II/07

Dept : CSE

Date: 14.09.2018

Parameters	Please Tick mark on the appropriate box				
	Excellent (5)	Good (4)	Satisfactory (3)	Poor (2)	Very Poor (1)
Resource person knowledge on the Course	✓				
Course Delivery		✓			
Practical Experience		✓			
Additional resources available	✓				
Overall rating about lecture and Training		✓			

Positive points about the Lecture:

Execute more queries during this program

Suggestions for improvement:

Principal,
Knowledge Institute of Technology
Kakapalayam (Po), Salem-637 504

Gukumar . M

(Signature of the student)

KNOWLEDGE INSTITUTE OF TECHNOLOGY, SALEM.

Department of Computer Science and Engineering

FEEDBACK FORM

Type of Course: Certificate Course

Name of the Student: Monica.R

Course Title: Database Design and programming with SQL using Oracle ilearn

Year/ Sem: IV/07

Dept : CSE

Date: 14.09.18

Parameters	Please Tick mark on the appropriate box				
	Excellent (5)	Good (4)	Satisfactory (3)	Poor (2)	Very Poor (1)
Resource person knowledge on the Course	✓				
Course Delivery		✓			
Practical Experience		✓			
Additional resources available			✓		
Overall rating about lecture and Training		✓			

Positive points about the Lecture:

Explained clearly with many instances and useful

Suggestions for improvement:

Principal,
Knowledge Institute of Technology
Kakapalayam (Po), Salem-637 504

Monica R

(Signature of the student)

KNOWLEDGE INSTITUTE OF TECHNOLOGY, SALEM.

Department of Computer Science and Engineering

FEEDBACK FORM

Type of Course: Certificate Course

Name of the Student: Kavipriya. G

Course Title: Database design and programming with SQL using oracle learni

Year/ Sem: IV 107

Dept : CSE

Date: 14.09.2018

Parameters	Please Tick mark on the appropriate box				
	Excellent (5)	Good (4)	Satisfactory (3)	Poor (2)	Very Poor (1)
Resource person knowledge on the Course	✓				
Course Delivery		✓			
Practical Experience	✓				
Additional resources available		✓			
Overall rating about lecture and Training			✓		

Positive points about the Lecture:

Gained lot of exposure in real time applications

Suggestions for improvement:

Principal,
Knowledge Institute of Technology
Kakapalayam (Po), Salem-637 504

(Signature of the student)

KNOWLEDGE INSTITUTE OF TECHNOLOGY, SALEM.

Department of Computer Science and Engineering

FEEDBACK FORM

Type of Course: Certificate Course

Name of the Student: Harini M

Course Title: Database Design and programming with SQL using oracle ilearn

Year/ Sem: IV/07

Dept : CSE

Date: 14.09.18

Parameters	Please Tick mark on the appropriate box				
	Excellent (5)	Good (4)	Satisfactory (3)	Poor (2)	Very Poor (1)
Resource person knowledge on the Course	✓				
Course Delivery		✓			
Practical Experience		✓			
Additional resources available	✓				
Overall rating about lecture and Training		✓			

Positive points about the Lecture:

Gained experience in Database

Suggestions for improvement:

Principal,
Knowledge Institute of Technology
Kakapalayam (Po), Salem-637 504

Harini M

(Signature of the student)

112-201819-CE-01

KNOWLEDGE INSTITUTE OF TECHNOLOGY, SALEM-637504

DEPARTMENT OF CIVIL ENGINEERING

REPORT OF THE EVENT

Date	:	02.07.2018 to 12.07.2018	Resource person	:	Mr. Abhuthaheer.S, Assistant Professor, Dept of Civil Engg., KIOT.
Time	:	2.00 pm to 6.00pm	Title	:	Certification Course on "Architectural Design of buildings using Revit Architecture"
Venue	:	CC10, D-Block, KIOT.	No. of Participants	:	25

1. The veteran course instructor explained about the Revit Architecture tools and features. The number of students participated were 25.
2. This training has been organized to enhance the standard of fresh civil engineering graduates to become acceptable to the industry.
3. His training gave a clear cut picture of how students can improve the employability skills of our students with the help of this software tool.
4. He also shared his long term experiences in the Construction field and explained the difficulties he had faced in his Industrial Career.

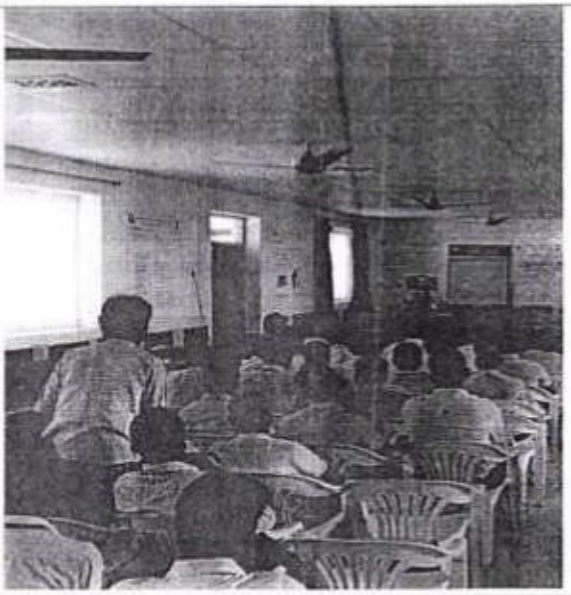

Encl: Circular / Brochure / Attendance Sheet

PRINCIPAL,
Knowledge Institute of Technology
Kakapalayam (PO), Salem - 637 504

KNOWLEDGE INSTITUTE OF TECHNOLOGY, SALEM - 637 504

CIRCULAR

Circular No.	CIVIL/CC/2018-19/01	**Date**	29.06.2018
To	II Year CIVIL ENGINEERING students		
Subject	Certification Course on **Architectural Design of buildings using Revit Architecture** –reg.		
Circular issued by	Department of Civil Engineering.		

This is to inform you that Department of Civil Engineering has planned to conduct certification course on **Architectural Design of buildings using Revit Architecture** for II year Civil Engineering students. Registered candidates are requested to attend the course.

SL. NO.	NAME OF THE PROGRAM	VENUE DATE & TIME	RESOURCE PERSON
1	Course on **"Architectural Design of buildings using Revit Architecture"**	**CC10, D-Block, KIOT.** 02.07.2018 to 12.07.2018 2.00 pm to 6.00pm	**Mr. S.Abhuthaheer,** Assitant Professor, Dept. Of Civil Engg. KIOT

For Further Details Kindly Contact: Mr. S. Pradeep Kumar, AP/Civil (978707797)

SENDER		PRINCIPAL

MECH	VP Office	CIVIL	EEE	ECE	CSE	S&H	PD	LIB	EMS	AO	Trans-port I/C	Hostel NB	Director / Training	Director / Placement	Residential Warden		College NB	Office / File	Class Circula-tion	Security Office	KBS	Recep tion
															LH	GH						
*	*	*	*	*	*								*	*				*				

Checked by Principal office I/C		Verified by the sender	

File :

1) Principal Office :
2) Concerned issuing department :

PRINCIPAL,
Knowledge Institute of Technology
Kakapalayam (PO) Salem - 637 504

Certificate Course

on

Architectural Design of buildings using Revit Architecture

02.07.2018 to 12.07.2018

Organized by

Department of Civil Engineering

KNOWLEDGE

INSTITUTE OF TECHNOLOGY

Accredited by NAAC and NBA

KIOT campus, Kakapalayam (PO), Salem-637 504,
Tamil Nadu, India.
www.kiot.ac.in

PRINCIPAL,
Knowledge Institute of Technology
Kakapalayam (PO), Salem - 637 504

KNOWLEDGE INSTITUTE OF TECHNOLOGY

Knowledge Institute of Technology is one of the upcoming Institutions in India. The college was established in the year 2009. Knowledge Institute of Technology is a brainchild of Eminent Professors from leading Engineering Colleges, Philanthropists, Friends and Entrepreneurs who would like to contribute in nation building by establishing higher learning Institutions. The cutting edge infrastructure, well experienced faculty and accomplished staff make KIOT as a Premier Centre for learning. The college offers 5 B.E. courses and 4 M.E. courses accredited by NAAC and NAAC and NBA (MECH, EEE, ECE, CSE). The vast experience of the promoters in training the students for all-round professionals and skill development ensures every student to transform into an evolved individual and a highly employable professional.

ABOUT THE DEPARTMENT OF CIVIL ENGINEERING

The Civil Engineering branch of KIOT was started in the year 2010-11. The faculty members are well experienced and qualified in different specializations. In the enhancement of research forum, the department has established a "Centre for Sustainable Building Research" and initiated the LEED Lab (Leadership in Energy and Environmental Design) in association with United States Green Building Council (USGBC) and Centre of Excellence on "Remote Sensing & GIS" in association with SAKURA for carrying out research, teaching and consultation activities in various disciplines of Civil Engineering.

SYLLABUS

1. Introduction to Revit Architecture

Introduction About Revit Architecture, History of Revit Architecture, Units, modeling process.

2.Basics of creating and modifying objects

Basics of creating and modifying objects- Creating geometry, Wall, Doors, Windows , Railing, Wall.

3. Editing tools

Editing tools- Move, Copy, Rotate, Array, Mirror, Align, Split, Trim, Offset.

4. Modelling

Floor, Roof, Component, Stairs, Railings, Ramp, Curtains

5. Modelling

System, Curtain, Grid, Mullion, Host Sweep, Create, Profile Creation Method- Overall review of basic concepts and topics discussed.

6. Advanced Design parameters

Introduction About advanced Revit Architecture - Massing - Basics (Drafting), View (schedule & quantities)

7. 3D design of structures

Room & areas,View (sheet, create a new sheet) Structural, Construction, Site (hand scope works), View (creating camera views)

8. Creation of family

Family - Creating doors, windows, furniture, profile, Rendering works (exterior @ interior), Interior living, Interior Kids- Walk through works - Settings works, printing options (Export and Import).

For Registration Kindly Contact:
Mr. Pradeep Kumar S, AP/Civil,
M:+91978707797 , Mail: spkcivil@kiot.ac.in

From

22.06.2018, Salem

S.Pradeep Kumar,
Assistant Professor,
Department of civil engineering,
Knowledge Institute of Technology,
Salem- 637 504.

To

The Principal,
Knowledge Institute of Technology,
Salem- 637504.

Through,
Head of the Department/CIVIL

Respected Sir,

Subject: Requisition for Conducting Certification Course-Reg.

We have planned to conduct certification course on "**ARCHITECTURAL DESIGN OF BUILDINGS USING REVIT ARCHITECTURE**" from 02.07.2018 to 12.07.2018 for a period of 10 days with the duration of 40 hours. It will be helpful for our II Year Civil Engineering students through which they can enrich their knowledge in Architectural design for various buildings. In this regards we request you to endowment as permission to conduct the course. This course is not in our curriculum and will be helpful for the skill development and placement of our students.

The course details are as follows:

Description	Particulars
Year	II (Civil Engineering Students)
Name of the Course	**ARCHITECTURAL DESIGN OF BUILDINGS USING REVIT ARCHITECTURE**
Company/ Resource Person	**Mr.S.Abuthaheer,** Assistant professor/CIVIL, Knowledge Institute of Technology
Total Number of Students Registered	**25** Nos.

Thank you sir

Yours truly,

(S.Pradeep Kumar)

HOD/CIVIL

PRINCIPAL,
Knowledge Institute of Technology
Kakapalayam (PO), Salem - 637 504

PRINCIPAL

KNOWLEDGE INSTITUTE OF TECHNOLOGY

DEPARTMENT OF CIVIL ENGINEERING

REGISTERED STUDENTS FOR CERTIFICATION COURSE

The following students have been registered for the various certification courses conductd by the department of civil engineering for the AY 2018-19

S.No	Register No	Name of the student	Name of the certificate courses	Start Date	End Date	Duration Hrs (10 Days)
1	611217103001	AJEETHA. R	Architectural Design of Buildings using Revit Architecture	02-07-2018	12-07-2018	40
2	611217103006	DHIVYA. A				
3	611217103007	ELAKKIYA. G				
4	611217103008	GOKUL KUMAR.B				
5	611217103009	HARI RAJ. R				
6	611217103013	LINGESHWARAN. K				
7	611217103014	LOGESHWARI. P				
8	611217103017	MANIKANDAN. G				
9	611217103018	MONICA.M				
10	611217103021	NANDHINI.G.S				
11	611217103022	NAVEEN . A. K				
12	611217103025	PREMRAJ.P				
13	611217103029	RAMYA.K				
14	611217103031	SANTHIYA. P				
15	611217103032	SOWMIYA DEVI. C. S				
16	611217103033	SRIMATHIHARINDRA PRASATH.K				
17	611217103035	SUGANTHI.S				
18	611217103036	SUSEENDRAN. S				
19	611217103037	SUSHMITHA.A				
20	611217103038	SWETHA.S				
21	611217103040	VAISHALI.R				
22	611217103304	MOHAMMED TALHA D				
23	611217103305	PRASATH S				
24	611217103306	PRIYADARSHINI S				
25	611217103307	SRI VIGNESH G				

COURSE CO-ORDINATOR

HOD/CIVIL

PRINCIPAL,
Knowledge Institute of Technology
Kakkapalayam (PO), Salem - 637 504

PRINCIPAL,
Knowledge Institute of Technology
Kakapalayam (PO) Salem - 637 504

KNOWLEDGE INSTITUTE OF TECHNOLOGY
DEPARTMENT OF CIVIL ENGINEERING
Course on Architectural Design of Buildings using Revit Architecture
ATTENDANCE REPORT

S.No	Register No	Name of the student	02/07/18	03/07/18	04/07/18	05/07/18	06/07/18	07/07/18	09/07/18	09/07/18	10/07/18	11/07/18	12/07/18
1	611217103001	AJEETHA. R	/	/	/	/	/	/	/	/	/	/	/
2	611217103006	DHIVYA. A	/	/	/	/	/	/	/	/	/	/	/
3	611217103007	ELAKKIYA. G	/	/	/	/	/	/	/	/	/	/	/
4	611217103008	GOKUL KUMAR.B	/	/	/	a	/	/	/	/	/	/	/
5	611217103009	HARI RAJ. R	/	/	/	/	/	/	/	/	/	/	/
6	611217103013	LINGESHWARAN. K	/	/	/	/	/	/	/	/	/	/	/
7	611217103014	LOGESHWARI. P	a	/	/	/	/	/	/	/	/	/	/
8	611217103017	MANIKANDAN. G	/	/	/	/	/	/	/	/	/	/	/
9	611217103018	MONICA.M	/	/	/	/	/	/	a	/	a	/	/
10	611217103021	NANDHINI.G.S	/	/	/	/	/	/	/	/	/	/	/
11	611217103022	NAVEEN . A. K	/	/	/	/	a	/	/	/	/	/	/
12	611217103025	PREMRAJ.P	/	/	/	/	/	/	/	/	/	/	/
13	611217103029	RAMYA.K	/	/	/	/	/	/	/	/	/	/	/
14	611217103031	SANTHIYA. P	/	/	/	/	/	/	/	/	/	/	/
15	611217103032	SOWMIYA DEVI C. S	a	/	a	/	/	/	/	/	/	/	/
16	611217103033	SRIMATHIHARINDRA PRASATH.K	/	/	/	/	/	/	/	/	/	/	/
17	611217103035	SUGANTHI.S	/	/	/	/	/	/	/	a	/	/	/
18	611217103036	SUSEENDRAN. S	/	/	/	/	/	/	a	/	/	/	/
19	611217103037	SUSHMITHA.A	/	/	/	/	/	/	/	/	/	/	/
20	611217103038	SWETHA.S	/	/	/	/	/	/	/	/	/	/	a
21	611217103040	VAISHALI.R	/	a	/	/	/	/	/	/	/	/	/
22	611217103304	MOHAMMED TALHA D	/	/	/	/	/	/	/	/	/	/	/
23	611217103305	PRASATH S	/	/	/	/	/	/	/	/	/	/	/
24	611217103306	PRIYADARSHINI S	/	/	/	/	/	/	a	/	/	/	/
25	611217103307	SRI VIGNESH G	/	/	/	/	/	/	/	/	/	/	/
		No. of Students present	23	24	24	24	24	25	23	24	24	24	24
		No. of Students absent	02	01	01	01	01	—	02	01	01	01	01
		Course co-ordinator Sign	Sple	Sple	Sple	Sple	Sple	Sple	Sple	Sple	Sple	Sple	Sple
		Head/Sign	G. Singh										

KNOWLEDGE INSTITUTE OF TECHNOLOGY Department of Civil Engineering Course Plan			
Name of the Course	**Architectural Design of Building using Revit Architecture**	**Semester**	03
Level-1 Module	08	Number of Hours	40 hours

EXECUTION SCHEDULE

Module No.	Name of the Module LEVEL 1	No. of Hours
1	Introduction to **Revit Architecture** -Units	04
2	Basics-Wall, Doors, Windows	04
3	Editing tools- Move, Copy, Rotate, Array, Mirror, Align, Split, Trim, Offset	04
4	Modeling-Floor, Roof, Component, Stairs, Railings, Ramp, Curtain,	08
5	Modeling- System, Curtain, Grid, Mullion, Host Sweep, Create, Profile Creation Method	08
6	Advanced Design parameters	04
7	3D design of Structures	04
8	Creation of family Rendering works	04

PRINCIPAL,
Knowledge Institute of Technology
Kakapalayam (PO) Salem - 637 504

Detailed Execution Plan

Name of the Course Module: 1. Introduction to **Revit Architecture**

Duration: 04 hours

Module No.	Name of the Module	Teaching Hours	Practical Hours	Self-Study Hours	Course Plan (Day wise)
1	Introduction About **Revit Architecture**, History of **Revit Architecture**, Units, modeling process.	2	2	-	Day 1

Detailed Execution Plan

Name of the Course Module: 2. Basics of creating and modifying objects

Duration: 04 hours

Module No.	Name of the Module	Teaching Hours	Practical Hours	Self-Study Hours	Course Plan (Day wise)
2	Basics of creating and modifying objects- Creating geometry, Wall, Doors, Windows , Railing, Wall.	2	2	-	Day 2

PRINCIPAL,
Knowledge Institute of Technology
Kakapalayam (PO), Salem - 63

Detailed Execution Plan

Name of the Course Module: 3. Editing tools

Duration: 04 hours

Module No.	Name of the Module	Teaching Hours	Practical Hours	Self-Study Hours	Course Plan (Day wise)
3	Editing tools- Move, Copy, Rotate, Array, Mirror, Align, Split, Trim, Offset	2	2	-	Day 3

Detailed Execution Plan

Name of the Course Module: 4 and 5. Modeling

Duration: 16 hours

Module No.	Name of the Module	Teaching Hours	Practical Hours	Self-Study Hours	Course Plan (Day wise)
4	Modeling- Floor, Roof, Component, Stairs, Railings, Ramp, Curtain,	4	4	-	Day 4
5	Modeling- System, Curtain, Grid, Mullion, Host Sweep, Create, Profile Creation Method- Overall review of basic concepts and topics discussed	4	4	-	Day 5

PRINCIPAL
Knowledge Institute of Technology
Kakapalayam (PO) Salem - 637 504

Detailed Execution Plan

Name of the Course Module: 6. Advanced Design parameters

Duration: 04 hours

Module No.	Name of the Module	Teaching Hours	Practical Hours	Self-Study Hours	Course Plan (Day wise)
6	Introduction About advanced **Revit Architecture** - Massing - Basics (Drafting), View (schedule & quantities)	2	2	-	Day 6

Detailed Execution Plan

Name of the Course Module: 7. 3D design of structures

Duration: 4 hours

Module No.	Name of the Module	Teaching Hours	Practical Hours	Self-Study Hours	Course Plan (Day wise)
7	Room & areas View (sheet, create a new sheet) Structural Construction Site (hand scope works) View (creating camera views)	2	2	-	Day 7

PRINCIPAL,
Knowledge Institute of Technology
Kakapalayam (PO) Salem - 637 504

Detailed Execution Plan Name of the Course Module: 8. Creation of family Duration: 08 hours					
Module No.	**Name of the Module**	**Teaching Hours**	**Practical Hours**	**Self-Study Hours**	**Course Plan (Day wise)**
8	Family - Creating doors, windows, furniture, profile Rendering works (exterior @ interior), Interior living, Interior Kids- Walk through works - Settings works, printing options (Export and Import)	2	2	-	Day 8

FACULTY I/c

PRINCIPAL,
Knowledge Institute of Technology
Kakapalayam (PO), Salem - 637 504

HOD CIVIL

611217103306
Sivignesh.G

	KNOWLEDGE INSTITUTE OF TECHNOLOGY	
	Approved by AICTE, Affiliated to Anna University, Accredited by NAAC	
	Kakapalayam (PO), Salem – 637 504	www.kiot.ac.in

Assessment for course on Architectural Design of Buildings using Revit Architecture

1. Where are we find the curtain wall?
   A) Build Panel
   B) Type Property
   C) Type Selector
   D) Instance Property

2. Where can you find the Window option in ribbon palate?
   A) Circulation
   B) Build
   C) Model
   D) None of these

3. View Cube can be found in the _____ View
   A) Elevation View
   B) Section View
   C) Camra View
   D) 3d View

4. What is the shortkey of Door?
   A) DO
   B) DOO
   C) DA
   D) DR

5. Define stair sketch method.
   A) Stair by sketch
   B) Stair by face
   C) Stair in component
   D) Stair by floor

6. What is the Revit project file format?
   A) RFA
   B) DWG
   C) RVT
   D) FBX

7. Where is the option Door located in ribbon palate?
   A) Circulation
   B) Build
   C) Model
   D) None of these

8. What is full form of UI in Revit Architecture?

19/20

PRINCIPAL,
Knowledge Institute of Technology
Kakapalayam (PO), Salem - 637 504

A) User Interface Workflow
B) User Interface
C) User Interfere
D) None of these

9. What is the Revit family file format?
A) FBX
B) RVT
C) RFA
D) DWF

10. We typically sketch the shaft on a host element _____ view.
A) Celling plan
B) 2d plan
C) Floor plan
D) None of these

11. What is the Grid short key?
A) GD
B) GR
C) GI
D) GRD

12. Create Beam in 3d View by using 3d snapping tools.
A) true
B) false

13. By which process we can draw floor by face?
A) Create floor select mass floor
B) mass floor convert into floor building model
C) create mass floor us floor by face
D) None of these.

14. How can we create Ceiling?
A) Ceiling defined by walls
B) Sketch inside boundary
C) Pick line method
D) All above

15. You Can Collapse the tree by selecting the _____ in the Project browser.
A) -icon
B) +icon
C) +icon and -icon
D) None of these

16. What is the Wall shortkey?
A) WAL
B) WL
C) WA

PRINCIPAL,
Knowledge Institute of Technology
Kakapalayam (PO), Salem - 637 504

D) WLL

17. Model Group:Use group when you plan to repeat layout many times in a _____.

A) Files
B) Project and family
C) family
D) None of these

18. Where can you locate Conceptual mass modelling?

A) Ribbon palate
B) Application menu bar
C) Project Browser
D) |Property Palate

19. How many types of railings are there?

A) 2
B) 4
C) 6
D) 7

20. Where are we find the curtain wall?

A) Build Panel
B) Type Property
C) Type Selector
D) Instance Property

PRINCIPAL,
Knowledge Institute of Technology
Kakapalayam (PO) Salem - 637 504

18-19

KNOWLEDGE INSTITUTE OF TECHNOLOGY

DEPARTMENT OF CIVIL ENGINEERING

Course on Architectural Design of Buildings using Revit Architecture

ASSESSMENT REPORT

S.No	Register No	Name of the student	Marks
1	611217103001	AJEETHA. R	20
2	611217103006	DHIVYA. A	19
3	611217103007	ELAKKIYA. G	18
4	611217103008	GOKUL KUMAR.B	20
5	611217103009	HARI RAJ. R	20
6	611217103013	LINGESHWARAN. K	19
7	611217103014	LOGESHWARI. P	19
8	611217103017	MANIKANDAN. G	20
9	611217103018	MONICA.M	19
10	611217103021	NANDHINI.G.S	18
11	611217103022	NAVEEN . A. K	20
12	611217103025	PREMRAJ.P	20
13	611217103029	RAMYA.K	19
14	611217103031	SANTHIYA. P	19
15	611217103032	SOWMIYA DEVI. C. S	20
16	611217103033	SRIMATHIHARINDRA PRASATH.K	19
17	611217103035	SUGANTHI.S	18
18	611217103036	SUSEENDRAN. S	20
19	611217103037	SUSHMITHA.A	20
20	611217103038	SWETHA.S	19
21	611217103040	VAISHALI.R	19
22	611217103304	MOHAMMED TALHA D	20
23	611217103305	PRASATH S	19
24	611217103306	PRIYADARSHINI S	18
25	611217103307	SRI VIGNESH G	20

COURSE CO-ORDINATOR

Principal,
Knowledge Institute of Technology
Kakapalayam (Po), Salem-637 504

HOD/CIVIL

KNOWLEDGE INSTITUTE OF TECHNOLOGY

Approved by AICTE, Affiliated to Anna University, Accredited by NAAC

Kakapalayam (PO), Salem – 637 504 | www.kiot.ac.in

Assessment for course on Architectural Design of Buildings using Revit Architecture

1. Where are we find the curtain wall?
   A) Build Panel
   B) Type Property
   C) Type Selector
   D) Instance Property

2. Where can you find the Window option in ribbon palate?
   A) Circulation
   B) Build
   C) Model
   D) None of these

3. View Cube can be found in the _____ View
   A) Elevation View
   B) Section View
   C) Camra View
   D) 3d View

4. What is the shortkey of Door?
   A) DO
   B) DOO
   C) DA
   D) DR

5. Define stair sketch method.
   A) Stair by sketch
   B) Stair by face
   C) Stair in component
   D) Stair by floor

6. What is the Revit project file format?
   A) RFA
   B) DWG
   C) RVT
   D) FBX

7. Where is the option Door located in ribbon palate?
   A) Circulation
   B) Build
   C) Model
   D) None of these

8. What is full form of UI in Revit Architecture?

20/20

PRINCIPAL,
Knowledge Institute of Technology
Kakapalayam (PO), Salem - 637 504

A) User Interface Workflow
B) User Interface
C) User Interfere
D) None of these

9. What is the Revit family file format?
A) FBX
B) RVT
C) RFA
D) DWF

10. We typically sketch the shaft on a host element _____ view.
A) Celling plan
B) 2d plan
C) Floor plan
D) None of these

11. What is the Grid short key?
A) GD
B) GR
C) GI
D) GRD

12. Create Beam in 3d View by using 3d snapping tools.
A) true
B) false

13. By which process we can draw floor by face?
A) Create floor select mass floor
B) mass floor convert into floor building model
C) create mass floor us floor by face
D) None of these.

14. How can we create Ceiling?
A) Ceiling defined by walls
B) Sketch inside boundary
C) Pick line method
D) All above

15. You Can Collapse the tree by selecting the _____ in the Project browser.
A) -icon
B) +icon
C) +icon and -icon
D) None of these

16. What is the Wall shortkey?
A) WAL
B) WL
C) WA

PRINCIPAL,
Knowledge Institute of Technology
Kakapalayam (PO) Salem - 637 504

D) WLL

17. Model Group:Use group when you plan to repeat layout many times in a _____.
    A) Files
    B) Project and family
    C) family
    D) None of these
18. Where can you locate Conceptual mass modelling?
    A) Ribbon palate
    B) Application menu bar
    C) Project Browser
    D) |Property Palate
19. How many types of railings are there?
    A) 2
    B) 4
    C) 6
    D) 7
20. Where are we find the curtain wall?
    A) Build Panel
    B) Type Property
    C) Type Selector
    D) Instance Property

PRINCIPAL,
Knowledge Institute of Technology
Kakapalayam (PO) Salem - 637 504

KNOWLEDGE INSTITUTE OF TECHNOLOGY

Approved by AICTE, Affiliated to Anna University, Accredited by NAAC

Kakapalayam (PO), Salem – 637 504 | www.kiot.ac.in

Assessment for course on Architectural Design of Buildings using Revit Architecture

1. Where are we find the curtain wall?
   A) Build Panel
   B) Type Property
   C) Type Selector
   D) Instance Property

2. Where can you find the Window option in ribbon palate?
   A) Circulation
   B) Build
   C) Model
   D) None of these

3. View Cube can be found in the _____ View
   A) Elevation View
   B) Section View
   C) Camra View
   D) 3d View

4. What is the shortkey of Door?
   A) DO
   B) DOO
   C) DA
   D) DR

5. Define stair sketch method.
   A) Stair by sketch
   B) Stair by face
   C) Stair in component
   D) Stair by floor

6. What is the Revit project file format?
   A) RFA
   B) DWG
   C) RVT
   D) FBX

7. Where is the option Door located in ribbon palate?
   A) Circulation
   B) Build
   C) Model
   D) None of these

8. What is full form of UI in Revit Architecture?

18/20

PRINCIPAL,
Knowledge Institute of Technology
Kakapalayam (PO) Salem - 637 504

A) User Interface Workflow
B) User Interface
C) User Interfere
D) None of these

9. What is the Revit family file format?
A) FBX
B) RVT
C) RFA
D) DWF

10. We typically sketch the shaft on a host element _____ view.
A) Celling plan
B) 2d plan
C) Floor plan
D) None of these

11. What is the Grid short key?
A) GD
B) GR
C) GI
D) GRD

12. Create Beam in 3d View by using 3d snapping tools.
A) true
B) false

13. By which process we can draw floor by face?
A) Create floor select mass floor
B) mass floor convert into floor building model
C) create mass floor us floor by face
D) None of these.

14. How can we create Ceiling?
A) Ceiling defined by walls
B) Sketch inside boundary
C) Pick line method
D) All above

15. You Can Collapse the tree by selecting the _____ in the Project browser.
A) -icon
B) +icon
C) +icon and -icon
D) None of these

16. What is the Wall shortkey?
A) WAL
B) WL
C) WA

PRINCIPAL,
Knowledge Institute of Technology
Kakapalayam (PO) Salem - 637

D) WLL

17. Model Group:Use group when you plan to repeat layout many times in a _____.

A) Files
B) Project and family
C) family
D) None of these

18. Where can you locate Conceptual mass modelling?

A) Ribbon palate
B) Application menu bar
C) Project Browser
D) |Property Palate

19. How many types of railings are there?

A) 2
B) 4
C) 6
D) 7

20. Where are we find the curtain wall?

A) Build Panel
B) Type Property
C) Type Selector
D) Instance Property

PRINCIPAL,
Knowledge Institute of Technology
Kanjapalayam (PO), Salem - 637 504

KNOWLEDGE INSTITUTE OF TECHNOLOGY

Approved by AICTE, Affiliated to Anna University, Accredited by NAAC

Kakapalayam (PO), Salem – 637 504 | www.kiot.ac.in

Assessment for course on Architectural Design of Buildings using Revit Architecture

1. Where are we find the curtain wall?
   A) Build Panel
   B) Type Property
   C) Type Selector
   D) Instance Property

2. Where can you find the Window option in ribbon palate?
   A) Circulation
   B) Build
   C) Model
   D) None of these

3. View Cube can be found in the _____ View
   A) Elevation View
   B) Section View
   C) Camra View
   D) 3d View

4. What is the shortkey of Door?
   A) DO
   B) DOO
   C) DA
   D) DR

5. Define stair sketch method.
   A) Stair by sketch
   B) Stair by face
   C) Stair in component
   D) Stair by floor

6. What is the Revit project file format?
   A) RFA
   B) DWG
   C) RVT
   D) FBX

7. Where is the option Door located in ribbon palate?
   A) Circulation
   B) Build
   C) Model
   D) None of these

8. What is full form of UI in Revit Architecture?

17/20

Style

PRINCIPAL,
Knowledge Institute of Technology
Kakapalayam (PO), Salem - 637 504

A) User Interface Workflow
(B) User Interface
C) User Interfere
D) None of these

9. What is the Revit family file format?
A) FBX
(B) RVT
C) RFA
D) DWF

10. We typically sketch the shaft on a host element _____ view.
A) Celling plan
B) 2d plan
(C) Floor plan
D) None of these

11. What is the Grid short key?
A) GD
(B) GR
C) GI
D) GRD

12. Create Beam in 3d View by using 3d snapping tools.
A) true
B) false

13. By which process we can draw floor by face?
(A) Create floor select mass floor
B) mass floor convert into floor building model
C) create mass floor us floor by face
D) None of these.

14. How can we create Ceiling?
(A) Ceiling defined by walls
B) Sketch inside boundary
C) Pick line method
D) All above

15. You Can Collapse the tree by selecting the _____ in the Project browser.
(A) -icon
B) +icon
C) +icon and -icon
(D) None of these

16. What is the Wall shortkey?
A) WAL
(B) WL
C) WA

PRINCIPAL,
Knowledge Institute of Technology
Kakapalayam (PO), Salem - 637 504

D) WLL

17. Model Group:Use group when you plan to repeat layout many times in a _____.

A) Files
B) Project and family
C) family
D) None of these

18. Where can you locate Conceptual mass modelling?

A) Ribbon palate
B) Application menu bar
C) Project Browser
D) |Property Palate

19. How many types of railings are there?

A) 2
B) 4
C) 6
D) 7

20. Where are we find the curtain wall?

A) Build Panel
B) Type Property
C) Type Selector
D) Instance Property

PRINCIPAL,
Knowledge Institute of Technology
Kakapalayam (PO), Salem - 637 504

KNOWLEDGE INSTITUTE OF TECHNOLOGY

Approved by AICTE, Affiliated to Anna University, Accredited by NAAC

Kakapalayam (PO), Salem – 637 504 | www.kiot.ac.in

Assessment for course on Architectural Design of Buildings using Revit Architecture

1. Where are we find the curtain wall?
   A) Build Panel
   B) Type Property
   C) Type Selector
   D) Instance Property

2. Where can you find the Window option in ribbon palate?
   A) Circulation
   B) Build
   C) Model
   D) None of these

3. View Cube can be found in the _____ View
   A) Elevation View
   B) Section View
   C) Camra View
   D) 3d View

4. What is the shortkey of Door?
   A) DO
   B) DOO
   C) DA
   D) DR

5. Define stair sketch method.
   A) Stair by sketch
   B) Stair by face
   C) Stair in component
   D) Stair by floor

6. What is the Revit project file format?
   A) RFA
   B) DWG
   C) RVT
   D) FBX

7. Where is the option Door located in ribbon palate?
   A) Circulation
   B) Build
   C) Model
   D) None of these

8. What is full form of UI in Revit Architecture?

19/20

style

PRINCIPAL,
Knowledge Institute of Technology
Kakapalayam (PO), Salem - 637 504

A) User Interface Workflow
B) User Interface
C) User Interfere
D) None of these

9. What is the Revit family file format?
A) FBX
B) RVT
C) RFA
D) DWF

10. We typically sketch the shaft on a host element _____ view.
A) Celling plan
B) 2d plan
C) Floor plan
D) None of these

11. What is the Grid short key?
A) GD
B) GR
C) GI
D) GRD

12. Create Beam in 3d View by using 3d snapping tools.
A) true
B) false

13. By which process we can draw floor by face?
A) Create floor select mass floor
B) mass floor convert into floor building model
C) create mass floor us floor by face
D) None of these.

14. How can we create Ceiling?
A) Ceiling defined by walls
B) Sketch inside boundary
C) Pick line method
D) All above

15. You Can Collapse the tree by selecting the _____ in the Project browser.
A) -icon
B) +icon
C) +icon and -icon
D) None of these

16. What is the Wall shortkey?
A) WAL
B) WL
C) WA

PRINCIPAL,
Knowledge Institute of Technology
Kakapalayam (PO) Salem - 637 5..

D) WLL

17. Model Group:Use group when you plan to repeat layout many times in a _____.

A) Files
B) Project and family
C) family
D) None of these

18. Where can you locate Conceptual mass modelling?

A) Ribbon palate
B) Application menu bar
C) Project Browser
D) |Property Palate

19. How many types of railings are there?

A) 2
B) 4
C) 6
D) 7

20. Where are we find the curtain wall?

A) Build Panel
B) Type Property
C) Type Selector
D) Instance Property

PRINCIPAL,
Knowledge Institute of Technology
Kakapalayam (PO), Salem - 637 504

Beyond Knowledge

KNOWLEDGE INSTITUTE OF TECHNOLOGY

Approved by AICTE, Affiliated to Anna University, Accredited by NAAC

DEPARTMENT OF CIVIL ENGINEERING

Certificate

This is to certify that Mr/Ms R.AJEETHA of II year student in academic year 2018-19 has completed / ~~attended~~ the course on ARCHITECTURAL DESIGN OF BUILDINGS USING REVIT ARCHITECTURE during the period from 02.07.18 to 12.07.18 at Knowledge Institute of Technology, Salem.

PRINCIPAL
Knowledge Institute of Technology
Kakapalayam (PO) Salem - 637 504

COURSE INSTRUCTOR

HOD/CIVIL

PRINCIPAL

Beyond Knowledge

KNOWLEDGE INSTITUTE OF TECHNOLOGY

Approved by AICTE, Affiliated to Anna University, Accredited by NAAC

DEPARTMENT OF CIVIL ENGINEERING

Certificate

This is to certify that Mr/Ms M. MONICA of II year student in academic year 2018-19 has completed / ~~attended~~ the COURSE ON ARCHITECTURAL DESIGN OF BUILDINGS USING REVIT ARCHITECTURE during the period from 02.07.18 to 12.07.18 at Knowledge Institute of Technology, Salem.

PRINCIPAL,
Knowledge Institute of Technology
Kakapalayam (PO) Salem - 637 504

COURSE INSTRUCTOR

HOD/CIVIL

PRINCIPAL

Beyond Knowledge

KNOWLEDGE INSTITUTE OF TECHNOLOGY

Approved by AICTE, Affiliated to Anna University, Accredited by NAAC

DEPARTMENT OF CIVIL ENGINEERING

Certificate

This is to certify that Mr/Ms A.K.NAVEEN of II year student in academic year 2018-19 has completed / ~~attended~~ the COURSE ON ARCHITECTURAL DESIGN OF BUILDINGS USING REVIT ARCHITECTURE during the period from 02.07.18 to 12.07.18 at Knowledge Institute of Technology,Salem.

PRINCIPAL,
Knowledge Institute of Technology
Kakapalayam (PO) Salem - 637 504

COURSE INSTRUCTOR

HOD/CIVIL

PRINCIPAL

Beyond Knowledge

KNOWLEDGE INSTITUTE OF TECHNOLOGY

Approved by AICTE, Affiliated to Anna University, Accredited by NAAC

DEPARTMENT OF CIVIL ENGINEERING

Certificate

This is to certify that Mr/Ms P. LOGESHWARI of II year student in academic year 2018-19 has completed / ~~attended~~ the COURSE ON ARCHITECTURAL DESIGN OF BUILDINGS USING REVIT ARCHITECTURE during the period from 02.07.18 to 12.07.18 at Knowledge Institute of Technology, Salem.

PRINCIPAL
Knowledge Institute of Technology
Kakapalayam (PO) Salem - 637 50

COURSE INSTRUCTOR

HOD/CIVIL

PRINCIPAL

KNOWLEDGE INSTITUTE OF TECHNOLOGY

Approved by AICTE, Affiliated to Anna University, Accredited by NAAC

DEPARTMENT OF CIVIL ENGINEERING

Beyond Knowledge

Certificate

This is to certify that Mr/Ms S. SUGANTHI of II year student in academic year 2018-19 has completed / attended the COURSE ON ARCHITECTURAL DESIGN OF BUILDINGS USING REVIT ARCHITECTURE during the period from 02.07.18 to 12.07.18 at Knowledge Institute of Technology, Salem.

PRINCIPAL
Knowledge Institute of Technology
Kakapalayam (PO) Salem - 637 504

COURSE INSTRUCTOR | **HOD/CIVIL** | **PRINCIPAL**

KNOWLEDGE INSTITUTE OF TECHNOLOGY, SALEM
DEPARTMENT OF CIVIL ENGINEERING

FEEDBACK FORM
CERTIFICATION COURSE ON ARCHITECTURAL DESIGN OF BUILDINGS USING REVIT ARCHITECTURE

Name: Gokul kumar

Year/Sem/Sec: II/03

S.No	Feedback Questions	Good	Excellent	Moderate	Need to be improved
1	Course Content Delivery by the trainer	✓			
2	Course Material		✓		
3	Clarity of the content delivery		✓		
4	Hands on training experience			✓	
5	Overall experience about the Course		✓		

SUGGESTIONS IF ANY:

Good experience

Student Sign:

PRINCIPAL,
Knowledge Institute of Technology
Kakapalayam (PO) Salem - 637 504

KNOWLEDGE INSTITUTE OF TECHNOLOGY, SALEM
DEPARTMENT OF CIVIL ENGINEERING

FEEDBACK FORM
CERTIFICATION COURSE ON ARCHITECTURAL DESIGN OF BUILDINGS USING REVIT ARCHITECTURE

Name: R. AJEETHA

Year/Sem/Sec: II/03

S.No	Feedback Questions	Good	Excellent	Moderate	Need to be improved
1	Course Content Delivery by the trainer		✓		
2	Course Material	✓			
3	Clarity of the content delivery		✓		
4	Hands on training experience	✓			
5	Overall experience about the Course		✓		

SUGGESTIONS IF ANY:

during the course

Student Sign:

PRINCIPAL,
Knowledge Institute of Technology
Kakapalayam (PO), Salem - 637 504

KNOWLEDGE INSTITUTE OF TECHNOLOGY, SALEM
DEPARTMENT OF CIVIL ENGINEERING

FEEDBACK FORM
CERTIFICATION COURSE ON ARCHITECTURAL DESIGN OF BUILDINGS USING REVIT ARCHITECTURE

Name: R. Harirag

Year/Sem/Sec: II/03

S.No	Feedback Questions	Good	Excellent	Moderate	Need to be improved
1	Course Content Delivery by the trainer	✓			
2	Course Material		✓		
3	Clarity of the content delivery	✓			
4	Hands on training experience		✓		
5	Overall experience about the Course	✓			

SUGGESTIONS IF ANY:

GOOD - Hands on training experience.

Student Sign:

R. Harirag.

PRINCIPAL,
Knowledge Institute of Technology
Kakapalayam (PO), Salem - 637

KNOWLEDGE INSTITUTE OF TECHNOLOGY, SALEM
DEPARTMENT OF CIVIL ENGINEERING

FEEDBACK FORM

CERTIFICATION COURSE ON ARCHITECTURAL DESIGN OF BUILDINGS USING REVIT ARCHITECTURE

Name: Srimathi Krishnaprasath - K

Year/Sem/Sec: II/03

S.No	Feedback Questions	Good	Excellent	Moderate	Need to be improved
1	Course Content Delivery by the trainer	✓			
2	Course Material		✓		
3	Clarity of the content delivery		✓		
4	Hands on training experience		✓		
5	Overall experience about the Course		✓		

SUGGESTIONS IF ANY:

Hands on training experience

Student Sign:

PRINCIPAL,
Knowledge Institute of Technology
Kakapalayam (PO) Salem - 637 504

KNOWLEDGE INSTITUTE OF TECHNOLOGY, SALEM

DEPARTMENT OF CIVIL ENGINEERING

FEEDBACK FORM

CERTIFICATION COURSE ON ARCHITECTURAL DESIGN OF BUILDINGS USING REVIT ARCHITECTURE

Name: C. L Sowmiya Devi

Year/Sem/Sec: II/03

S.No	Feedback Questions	Good	Excellent	Moderate	Need to be improved
1	Course Content Delivery by the trainer	✓			
2	Course Material		✓		
3	Clarity of the content delivery			✓	
4	Hands on training experience		✓		
5	Overall experience about the Course	✓			

SUGGESTIONS IF ANY:

Hands on training experience is good

Student Sign:

PRINCIPAL
Knowledge Institute of Technology
Kakapalayam (PO) Salem - 637 504

112- 2018-19-CE-02

KNOWLEDGE INSTITUTE OF TECHNOLOGY, SALEM-637504

DEPARTMENT OF CIVIL ENGINEERING

REPORT OF THE EVENT

Date	:	09.07.2018 to 19.07.2018	**Resource person**	:	T.Prem Kumar, Course Instructor, Cadd square, Salem.
Time	:	9.30 am to 1.30pm	**Title**	:	Certification Course on **3D Modeling of buildings using 3ds MAX DESIGN**
Venue	:	CC10, D-Block, KIOT.	**No. of Participants**	:	42

1. This training has been organized to enhance the standard of fresh civil engineering graduates to become acceptable to the industry.
2. He has given the overall view of the software course and has made student to design the architectural perspective of the building.
3. This training gave a clear cut picture of planning and design of building to our students.
4. The veteran trainer shared his long term experiences in the design field and explained the importance of design of building

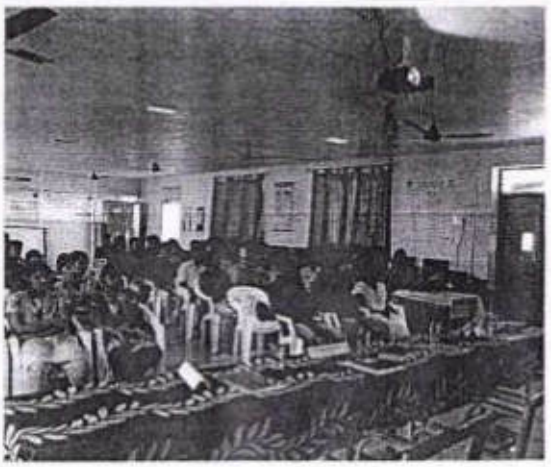

Encl: Circular / Brochure / Attendance Sheet

PRINCIPAL,
Knowledge Institute of Technology
Kakapalayam (PO), Salem - 637 504

KNOWLEDGE INSTITUTE OF TECHNOLOGY, SALEM - 637 504			
CIRCULAR			
Circular No.	CIVIL/CC/2018-19/02	**Date**	05.06.2018
To	III Year CIVIL ENGINEERING students		
Subject	Certification Course on **3D Modeling of buildings using 3ds MAX design** -reg		
Circular issued by	Department of Civil Engineering.		

This is to inform you that Department of Civil Engineering has planned to conduct certification course on **3D Modeling of buildings using 3ds MAX design** for III year Civil Engineering students. Registered candidates are requested to attend the course.

SL. NO.	NAME OF THE PROGRAM	VENUE DATE & TIME	RESOURCE PERSON
1	Course on **"3D Modeling of buildings using 3ds MAX design"**	**CC10, D-Block, KIOT.** 09.07.2018 to 19.07.2018 9.30 am to 1.30pm	**Er. T.Prem Kumar** Course Instructor, CAD SQUARE. Salem-4.

For Further Details Kindly Contact: Mr. S. Pradeep Kumar, AP/Civil (978707797)

SENDER		PRINCIPAL

MECH	VP Office	CIVIL	EEE	ECE	CSE	S&H	PD	LIB	EMS	AO	Trans-port I/C	Hostel NB	Director / Training	Director / Placement	Residential Warden		College NB	Office / File	Class Circula-tion	Security Office	KBS	Recep tion
															LH	GH						
*	*	*	*	*	*								*	*				*				

Checked by Principal office I/C		Verified by the sender	

File :

1) Principal Office :
2) Concerned issuing department :

PRINCIPAL,
Knowledge Institute of Technology
Kakapalayam (PO) Salem - 637 504

Certificate Course

on

3D modelling of Buildings using 3ds MAX DESIGN

09.07.2018 to 19.07.2018

Organized by

Department of Civil Engineering

KNOWLEDGE

INSTITUTE OF TECHNOLOGY

Accredited by NAAC and NBA

KIOT campus, Kakapalayam (PO), Salem-637 504,
Tamil Nadu, India.
www.kiot.ac.in

PRINCIPAL,
Knowledge Institute of Technology
Kakapalayam (PO) Salem - 637 504

ABOUT KIOT

Knowledge Institute of Technology is one of the upcoming Institutions in India. The college was established in the year 2009. Knowledge Institute of Technology is a brainchild of Eminent Professors from leading Engineering Colleges, Philanthropists, Friends and Entrepreneurs who would like to contribute in nation building by establishing higher learning Institutions. The cutting edge infrastructure, well experienced faculty and accomplished staff make KIOT as a Premier Centre for learning. The college offers 5 B.E. courses and 4 M.E. courses accredited by **NAAC and NBA (MECH, EEE, ECE, CSE)**. The vast experience of the promoters in training the students for all-round professionals and skill development ensures every student to transform into an evolved individual and a highly employable professional.

ABOUT THE DEPARTMENT OF CIVIL ENGINEERING

The Civil Engineering branch of KIOT was started in the year 2010-11. The faculty members are well experienced and qualified in different specializations. In the enhancement of research forum, the department has established a "Centre for Sustainable Building Research" and initiated the LEED Lab (Leadership in Energy and Environmental Design) in association with United States Green Building Council (USGBC) and Centre of Excellence on "Remote Sensing & GIS" in association with SAKURA for carrying out research, teaching and consultation activities in various disciplines of Civil Engineering.

SYLLABUS

1.Introduction to 3ds Max Design

Introduction To 3ds Max & GUI, Unit Setup, Application of Tools In Main Tool Bar & Command Panel.

2. Geometry and Objects

Geometric primitives, Standard primitivies, Extended Primitives ,Architectural objects, AEC extended objects.

3. Editing tools

Selection Tools, Operating Tools, Mirror & Snaps - Concepts Of 2d Shapes, Extrude Lathe, Loft, Boolean, Using Editable Spline.

4. Mesh & Poly

Relation With Auto Cad And Revit Architecture. Mesh & Poly Floor, Roof, Component, Stairs, Railings, Ramp, Curtains

5. Modelling

Modelling- System, Curtain, Grid, Mullion, Host Sweep, Create, Profile Creation Method System, Curtain, Grid, Mullion, Host Sweep, Create, Profile Creation Method.

6.Usage of tools

Selection Tools, Operating Tools, Mirror & Snaps - Concepts Of 2d Shapes, Extrude Lathe, Loft, Boolean.

7. Advanced Design parameters

Introduction To Material Textures And Maps Concepts of texturing And Adding .

8. 3D design of structures

Material Editor, Lights & Light Parameters, Camera & Camera Features, Path camera, Walk Through

9. Creation of family

Rendering works (exterior & interior), Interior living, Interior Kids- Walk through works - Settings works, printing options (Export and Import)

For Registration Kindly Contact:
Mr. Pradeep Kumar S, AP/Civil,
M:+91978707797 ,
Mail: spkcivil@kiot.ac.in

From

14/06/2018, Salem

S.Pradeep Kumar,
Assistant Professor,
Department of civil engineering,
Knowledge Institute of Technology,
Salem- 637 504.

To

The Principal,
Knowledge Institute of Technology,
Salem- 637504.

Through,
Head of the Department/CIVIL

Respected Sir,

Subject: Requisition for Conducting Certification Course-Reg.

We have planned to conduct certification course on "**3D MODELLING OF BUILDINGS USING 3ds MAX DESIGN**" from 09.07.2018 to 19.07.2018 for a period of 10 days with the duration of 40 hours. It will be helpful for our II Year Civil Engineering students through which they can enrich their knowledge in 3Dimensional animations for various buildings. In this regards we request you to endowment as permission to conduct the course. This course is not in our curriculum and will be helpful for the skill development and placement of our students.

The course details are as follows:

Description	Particulars
Year	III (Civil Engineering Students)
Name of the Course	**3D MODELLING OF BUILDINGS USING 3ds MAX DESIGN**
Company/ Resource Person	**Er. T.Prem Kumar,** **Course Instructor,** **Cadd Square,Salem**
Total Number of Students Registered	42 Nos.

Thank you sir

Yours truly,

(S. Pradeep Kumar)

HOD/CIVIL

PRINCIPAL

PRINCIPAL,
Knowledge Institute of Technology
Kakapalayam (PO), Salem - 637 504

KNOWLEDGE INSTITUTE OF TECHNOLOGY

DEPARTMENT OF CIVIL ENGINEERING

REGISTERED STUDENTS FOR CERTIFICATION COURSE

The following students have been registered for the various certification courses conductd by the department of civil engineering for the AY 2018-19

S.No	Register No	Name of the student	Name of the certificate courses	Start Date	End Date	Duration Hrs (10 Days)
1	611216103001	Aiswariya K C	3D modelling of Buildings using 3ds Max Design	09-07-2018	19-07-2018	40
2	611216103002	Aravinth B				
3	611216103003	Ayyappan R				
4	611216103004	Bharathraj D				
5	611216103006	Harineka P S				
6	611216103007	Harinisri K				
7	611216103008	Jeevagan R				
8	611216103011	Kiruthika G				
9	611216103012	Lakshmi S				
10	611216103014	Manikandaprabhu R				
11	611216103016	Monisha S				
12	611216103017	Nandhini R				
13	611216103018	Nanthini V				
14	611216103020	Nisha J				
15	611216103021	Niveditha J				
16	611216103022	Prasanth K				
17	611216103024	Ravi Kumar K				
18	611216103025	Sabari S				
19	611216103027	Santhiya M				
20	611216103032	Sathyan S				
21	611216103035	Suriya P				
22	611216103036	Sushmithaa P				
23	611216103038	Thamaraiselvan R				

PRINCIPAL,
Knowledge Institute of Technology
Kakapalayam (PO) Salem - 637 504

S.No	Register No	Name of the student	Name of the certificate courses	Start Date	End Date	Duration Hrs (10 Days)
24	611216103040	Tharani S	3D modelling of Buildings using 3ds Max Design	09-07-2018	19-07-2018	40
25	611216103042	Thilibkumar R				
26	611216103044	Vignesh Raj V				
27	611216103301	Boopathi Raj V				
28	611216103302	Elangovan R				
29	611216103304	Kanagaraj S				
30	611216103305	Karthik S				
31	611216103306	Kesavan K V				
32	611216103307	Madhan Babu V				
33	611216103308	Malligarjanan s				
34	611216103309	Murugabalaji R S				
35	611216103310	Nandhakumar P				
36	611216103311	Nandha Sriram V				
37	611216103313	Raja K				
38	611216103315	Ridesh Kumar V				
39	611216103316	Sakthivel S				
40	611216103317	Sathish kumar V				
41	611216103318	Siva Prasath S				
42	611216103320	Venkatesh S				

PRINCIPAL,
Knowledge Institute of Technology
Kakapalayam (PO), Salem - 637 504

KNOWLEDGE INSTITUTE OF TECHNOLOGY Department of Civil Engineering Course Plan			
Name of the Course	**3D modeling of Buildings using 3ds MAX DESIGN**	**Semester**	05
Level-1 Module	09	Number of Hours	40 hours

EXECUTION SCHEDULE

Module No.	Name of the Module LEVEL 1	No. of Hours
1	Introduction To 3ds Max & GUI, Unit Setup	04
2	Standard primitivies, Extended Primitives, Elevation	04
3	Tools, Mirror & Snaps - Concepts Of 2d Shapes	04
4	Relation With Auto Cad And Revit Architecture, Mesh & Poly	04
5	Modeling	04
6	Introduction To Material Textures And Maps Concepts of texturing And Adding	04
7	Material Editor, Lights & Light Parameters	04
8	Camera & Camera Features, Path camera, Walk Through	04
9	Rendering Setup & Rendering, Walk Through To Video	08

PRINCIPAL,
Knowledge Institute of Technology
Kakapalayam (PO) Salem - 637 504

Detailed Execution Plan

Name of the Course Module: 1. Introduction to 3ds Max Design

Duration: 04 hours

Module No.	Name of the Module	Teaching Hours	Practical Hours	Self-Study Hours	Course Plan (Day wise)
1	Introduction To 3ds Max & GUI Unit Setup Application of Tools In Main Tool Bar & Commad Panel.	2	2	-	Day 1

Detailed Execution Plan

Name of the Course Module: 2. Geometry and Objects

Duration: 04 hours

Module No.	Name of the Module	Teaching Hours	Practical Hours	Self-Study Hours	Course Plan (Day wise)
2	Geometric primitives, Standard primitivies, Extended Primitives , Architectural objects, AEC extended objects	2	2	-	Day 2

Detailed Execution Plan

Name of the Course Module: 3. Editing tools

Duration: 04 hours

Module No.	Name of the Module	Teaching Hours	Practical Hours	Self-Study Hours	Course Plan (Day wise)
3	Selection Tools, Operating Tools, Mirror & Snaps - Concepts Of 2d Shapes, Extrude Lathe , Loft, Boolean, Using Editable Spline	2	2	-	Day 3

PRINCIPAL,
Knowledge Institute of Technology
Kakapalayam (PO) Salem - 637 5

Detailed Execution Plan

Name of the Course Module: 4. Usage of mesh and poly

Duration: 04 hours

Module No.	Name of the Module	Teaching Hours	Practical Hours	Self-Study Hours	Course Plan (Day wise)
4	Relation With Auto Cad And Revit Architecture. Mesh & Poly	2	2	-	Day 4

Detailed Execution Plan

Name of the Course Module: 5. Modeling

Duration: 04 hours

Module No.	Name of the Module	Teaching Hours	Practical Hours	Self-Study Hours	Course Plan (Day wise)
5	Modeling- System, Curtain, Grid, Mullion, Host Sweep, Create, Profile Creation Method	2	2	-	Day 5

Detailed Execution Plan

Name of the Course Module: 6. Usage of tools

Duration: 04 hours

Module No.	Name of the Module	Teaching Hours	Practical Hours	Self-Study Hours	Course Plan (Day wise)
6	Selection Tools, Operating Tools, Mirror & Snaps - Concepts Of 2d Shapes Extrude Lathe , Loft, Boolean, ... Using Editable Spline	2	2	-	Day 6

PRINCIPAL,
Knowledge Institute of Technology
Kakapalayam (PO) Salem - 637 504

Detailed Execution Plan

Name of the Course 2 Module: 7. Advanced Design parameters

Duration: 04 hours

Module No.	Name of the Module	Teaching Hours	Practical Hours	Self-Study Hours	Course Plan (Day wise)
7	Introduction To Material Textures And Maps Concepts of texturing And Adding	2	2	-	Day 7

Detailed Execution Plan

Name of the Course Module: 8. 3D design of structures

Duration: 04 hours

Module No.	Name of the Module	Teaching Hours	Practical Hours	Self-Study Hours	Course Plan (Day wise)
8	Material Editor, Lights & Light Parameters, Camera & Camera Features, Path camera, Walk Through	2	2	-	Day 8

Detailed Execution Plan

Name of the Course Module: 9. Rendering

Duration: 08 hours

Module No.	Name of the Module	Teaching Hours	Practical Hours	Self-Study Hours	Course Plan (Day wise)
9	Rendering works (exterior @ interior), Interior living, Interior Kids- Walk through works - Settings works, printing options (Export and Import)	4	4	-	Day 9

FACULTY I/c

HOD CIVIL

PRINCIPAL,
Knowledge Institute of Technology
Kakapalayam (PO) Salem - 637 504

PRINCIPAL,
Knowledge Institute of Technology
Kakapalayam (PO) Salem - 637 504

KNOWLEDGE INSTITUTE OF TECHNOLOGY
DEPARTMENT OF CIVIL ENGINEERING

Course on 3D modelling of Buildings using 3ds Max Design

ATTENDANCE REPORT

S.No	Register No	Name of the student	09.07.18	10.7.18	11.7.18	12.7.18	13.7.18	14.7.18	15.7.18	16.7.18	17.7.18	18.7.18	19.7.18
1	611216103001	Aiswariya K C	/	/	/	/	/	/	/	/	/		
2	611216103002	Aravinth B	/	/	/	/	/	/	/	/	/	/	/
3	611216103003	Ayyappan R	/	/	/	/	/	/	/	/	/	/	/
4	611216103004	Bharathraj D	/	/	/	/	/	/	/	/	/	/	/
5	611216103006	Harineka P S	/	/	/	/	/	/	/	/	/	/	/
6	611216103007	Harinisri K	/	/	/	/	/	/	/	/	/	/	/
7	611216103008	Jeevagan R	/	/	/	/	/	/	/	/	/	/	/
8	611216103011	Kiruthika G	/	/	/	/	/	/	/	/	/	/	/
9	611216103012	Lakshmi S	/	/	/	/	/	a	/	/	/	/	/
10	611216103014	Manikandaprabhu R	/	/	/	/	/	/	/	/	/	/	/
11	611216103016	Monisha S	/	/	/	/	/	/	/	/	/	/	/
12	611216103017	Nandhini R	a	/	/	/	/	/	/	/	/	/	/
13	611216103018	Nanthini V	/	/	/	a	/	/	/	/	/	/	/
14	611216103020	Nisha J	/	/	/	/	/	/	/	/	/	/	/
15	611216103021	Niveditha J	/	/	/	/	/	/	/	/	/	/	/
16	611216103022	Prasanth K	/	/	/	/	/	/	/	a	/	a	/
17	611216103024	Ravi Kumar K	/	/	/	/	/	/	/	/	/	/	/
18	611216103025	Sabari S	/	/	/	/	/	/	/	/	/	/	/
19	611216103027	Santhiya M	/	/	/	/	/	/	/	/	/	/	/
20	611216103032	Sathyan S	/	/	/	/	/	/	/	/	/	/	/
21	611216103035	Suriya P	/	/	/	/	/	/	/	/	/	/	/
22	611216103036	Sushmithaa P	/	/	/	/	/	/	/	/	/	/	/
23	611216103038	Thamaraiselvan R	/	/	/	/	/	/	/	/	/	/	/
24	611216103040	Tharani S	a	/	/	/	/	/	/	/	/	/	/
25	611216103042	Thilibkumar R	/	/	/	/	/	/	/	/	/	/	a
26	611216103044	Vignesh Raj V	/	/	/	/	/	/	/	/	/	/	/
27	611216103301	Boopathi Raj V	/	/	/	/	/	a	/	/	a	/	/
28	611216103302	Elangovan R	/	/	/	/	/	/	/	/	/	/	/
29	611216103304	Kanagaraj S	/	/	/	/	/	/	/	/	/	/	/
30	611216103305	Karthik S	/	/	/	/	/	/	/	/	/	/	/
31	611216103306	Kesavan K V	/	/	a	/	/	/	/	/	/	/	/
32	611216103307	Madhan Babu V	/	/	/	/	/	/	/	/	/	/	/
33	611216103308	Malligarjanan s	/	/	/	/	/	/	/	/	/	/	/
34	611216103309	Murugabalaji R S	/	/	/	/	/	/	/	/	/	/	/
35	611216103310	Nandhakumar P	/	/	/	/	/	/	/	/	/	/	/
36	611216103311	Nandha Sriram V	/	/	/	/	/	/	/	/	/	/	a
37	611216103313	Raja K	/	/	/	/	/	/	/	/	/	/	/
38	611216103315	Ridesh Kumar V	/	/	/	/	/	/	a	/	/	/	/
39	611216103316	Sakthivel S	/	/	/	/	/	/	/	/	/	/	/
40	611216103317	Sathish kumar V	/	/	/	/	/	/	/	/	/	/	/
41	611216103318	Siva Prasath S	/	/	/	/	/	/	/	/	/	/	/
42	611216103320	Venkatesh S	/	/	/	/	/	/	/	/	/	/	/
	NO. OF STUDENTS PRESENT		40	42	41	41	42	40	41	41	41	41	40
	NO. OF STUDENTS ABSENT		02	NIL	01	01	NIL	02	01	01	01	01	02

Sph

P.M.S

KNOWLEDGE INSTITUTE OF TECHNOLOGY
DEPARTMENT OF CIVIL ENGINEERING
Course on 3D modelling of Buildings using 3ds Max Design
ASSESSMENT REPORT

S.No	Register No	Name of the student	Marks
1	611216103001	Aiswariya K C	20
2	611216103002	Aravinth B	19
3	611216103003	Ayyappan R	18
4	611216103004	Bharathraj D	20
5	611216103006	Harineka P S	20
6	611216103007	Harinisri K	19
7	611216103008	Jeevagan R	19
8	611216103011	Kiruthika G	20
9	611216103012	Lakshmi S	19
10	611216103014	Manikandaprabhu R	18
11	611216103016	Monisha S	20
12	611216103017	Nandhini R	20
13	611216103018	Nanthini V	19
14	611216103020	Nisha J	19
15	611216103021	Niveditha J	20
16	611216103022	Prasanth K	19
17	611216103024	Ravi Kumar K	18
18	611216103025	Sabari S	20
19	611216103027	Santhiya M	20
20	611216103032	Sathyan S	19
21	611216103035	Suriya P	19
22	611216103036	Sushmithaa P	20
23	611216103038	Thamaraiselvan R	19
24	611216103040	Tharani S	18
25	611216103042	Thilibkumar R	20
26	611216103044	Vignesh Raj V	20
27	611216103301	Boopathi Raj V	20
28	611216103302	Elangovan R	19
29	611216103304	Kanagaraj S	19
30	611216103305	Karthik S	20
31	611216103306	Kesavan K V	19
32	611216103307	Madhan Babu V	18
33	611216103308	Malligarjanan s	20

Principal,
Knowledge Institute of Technology
Kakapalayam (Po), Salem-637 504

S.No	Register No	Name of the student	Marks
34	611216103309	Murugabalaji R S	20
35	611216103310	Nandhakumar P	20
36	611216103311	Nandha Sriram V	19
37	611216103313	Raja K	19
38	611216103315	Ridesh Kumar V	20
39	611216103316	Sakthivel S	19
40	611216103317	Sathish kumar V	18
41	611216103318	Siva Prasath S	20
42	611216103320	Venkatesh S	17

COURSE CO-ORDINATOR

HOD/CIVIL

Principal
Knowledge Institute of Technology
Kakapalayam (Po), Salem-637 504

611216103316
Sakthivel S

	KNOWLEDGE INSTITUTE OF TECHNOLOGY	
	Approved by AICTE, Affiliated to Anna University, Accredited by NAAC	
Beyond Knowledge	Kakapalayam (PO), Salem – 637 504	www.kiot.ac.in

Assessment for course on 3D modelling of Buildings using 3ds Max Design

19/20

1. What is full form of UI in Revit Architecture?
   a) User Interface Workflow
   b) User Interface
   c) User Interfere
   d) None of these
2. Which comprises six user-interface panels that give you access to most of the modeling features of 3ds Max, as well as some animation features, display choices, and miscellaneous utilities.
   a. Material
   b. Render
   c. Frame Rate
   d. Command Panel
3. A type of geometric model of a three-dimensional object in which the basic shape is made up of points, or vertices, connected by edges
   a) Maps
   b) NTSC
   c) SMPTE
   d) Mesh
4. Which is a single point in a graphic image.
   a) Faces
   b) Pixel
   c) Edge
   d) Spline
5. Which is the colour that an object reflects when illuminated by "good lighting??" Also referred to as its natural colour.
   a) Editable Poly
   b) Title Bar
   c) Specular colour
   d) Diffuse Colour
6. which records the beginning and end of each transformation of an object or element in the scene .
   a) Faces
   b) Vectors
   c) Keyframes
   d) Vertex
7. A wireframe box that encloses the extents of an object is called_____.
   a) Origin

PRINCIPAL,
Knowledge Institute of Technology
Kakapalayam (PO) Salem - 637 504

b) Bounding Box
c) Modifiers
d) Animation

8. Which is a setting or value that you can change.
a) SMPTE
b) Parameter
c) Frame Rate
d) Vertex

9. Which provides quick access to tools and dialog boxes for many of the most common tasks in 3DS Max.
a) Status Bar
b) Title Bar
c) Menu Bar
d) Main Toolbar

10. What is the display area of the user interface that allows you to view and manipulate the modifiers on an object.
a) Title Bar
b) Modifier Stack
c) Material
d) Modifiers

11. Area of the User Interface where the objects are displayed is called_____
a) Vectors
b) Gizmo
c) Viewport
d) ViewCube

12. An arbitrary point in space is used as the _____
a) Grids
b) Spline
c) Object
d) Origin

13. Which is used to replicate an image used as a map.
a) Tile
b) Pixel
c) Tweens
d) Edge

14. which is a straight or curved line that connects two vertices in a mesh object or spline.
a) Render
b) Vertex
c) Tile
d) Edge

PRINCIPAL,
Knowledge Institute of Technology
Kakapalayam (PO), Salem - 637 504

15. Images generated by the computer in between the keyframes is called_____
    a) Tweens
    b) Faces
    c) Tile
    d) Grids
16. Which viewport display setting that lets you view objects in a given viewport as a wire mesh.
    a) Wireframe
    b) Frame Rate
    c) ViewCube
    d) Workflow
17. Which contains information about the scene and the active command?
    a) Material
    b) Title Bar
    c) Status Bar
    d) Menu Bar
18. which is an icon-based menu available from any button that has a small black triangle
    a) Polygons
    b) Flyout
    c) Faces
    d) Object
19. A collection of vertices and connecting segments that form a line or curve is called_____.
    a) Tile
    b) Origin
    c) Spline
    d) SMPTE
20.
21. Which is the standard time display format for most professional animation work?
    a) Maps
    b) SMPTE
    c) Vertex
    d) Tile

PRINCIPAL,
Knowledge Institute of Technology
Kakapalayam (PO) Salem - 637 504

P. Sushmithaa
611216103036

	KNOWLEDGE INSTITUTE OF TECHNOLOGY	
	Approved by AICTE, Affiliated to Anna University, Accredited by NAAC	
	Kakapalayam (PO), Salem – 637 504	www.kiot.ac.in

Assessment for course on 3D modelling of Buildings using 3ds Max Design

20/20

1. What is full form of UI in Revit Architecture?
   a) User Interface Workflow
   b) User Interface
   c) User Interfere
   d) None of these
2. Which comprises six user-interface panels that give you access to most of the modeling features of 3ds Max, as well as some animation features, display choices, and miscellaneous utilities.
   a. Material
   b. Render
   c. Frame Rate
   d. Command Panel
3. A type of geometric model of a three-dimensional object in which the basic shape is made up of points, or vertices, connected by edges
   a) Maps
   b) NTSC
   c) SMPTE
   d) Mesh
4. Which is a single point in a graphic image.
   a) Faces
   b) Pixel
   c) Edge
   d) Spline
5. Which is the colour that an object reflects when illuminated by "good lighting??" Also referred to as its natural colour.
   a) Editable Poly
   b) Title Bar
   c) Specular colour
   d) Diffuse Colour
6. which records the beginning and end of each transformation of an object or element in the scene .
   a) Faces
   b) Vectors
   c) Keyframes
   d) Vertex
7. A wireframe box that encloses the extents of an object is called_____.
   a) Origin

PRINCIPAL,
Knowledge Institute of Technology
Kakapalayam (PO) Salem - 637 504

b) Bounding Box
c) Modifiers
d) Animation

8. Which is a setting or value that you can change.
   a) SMPTE
   b) Parameter
   c) Frame Rate
   d) Vertex
9. Which provides quick access to tools and dialog boxes for many of the most common tasks in 3DS Max.
   a) Status Bar
   b) Title Bar
   c) Menu Bar
   d) Main Toolbar
10. What is the display area of the user interface that allows you to view and manipulate the modifiers on an object.
   a) Title Bar
   b) Modifier Stack
   c) Material
   d) Modifiers
11. Area of the User Interface where the objects are displayed is called_____
   a) Vectors
   b) Gizmo
   c) Viewport
   d) ViewCube
12. An arbitrary point in space is used as the _____
   a) Grids
   b) Spline
   c) Object
   d) Origin
13. Which is used to replicate an image used as a map.
   a) Tile
   b) Pixel
   c) Tweens
   d) Edge
14. which is a straight or curved line that connects two vertices in a mesh object or spline.
   a) Render
   b) Vertex
   c) Tile
   d) Edge

PRINCIPAL,
Knowledge Institute of Technology
Kakapalayam (PO) Salem - 637 504

15. Images generated by the computer in between the keyframes is called_____
    a) Tweens
    b) Faces
    c) Tile
    d) Grids
16. Which viewport display setting that lets you view objects in a given viewport as a wire mesh.
    a) Wireframe
    b) Frame Rate
    c) ViewCube
    d) Workflow
17. Which contains information about the scene and the active command?
    a) Material
    b) Title Bar
    c) Status Bar
    d) Menu Bar
18. which is an icon-based menu available from any button that has a small black triangle
    a) Polygons
    b) Flyout
    c) Faces
    d) Object
19. A collection of vertices and connecting segments that form a line or curve is called_____.
    a) Tile
    b) Origin
    c) Spline
    d) SMPTE
20.
21. Which is the standard time display format for most professional animation work?
    a) Maps
    b) SMPTE
    c) Vertex
    d) Tile

PRINCIPAL,
Knowledge Institute of Technology
Kakapalayam (PO) Salem - 637 504

Thilib kumar R.
611216103042

	KNOWLEDGE INSTITUTE OF TECHNOLOGY	
	Approved by AICTE, Affiliated to Anna University, Accredited by NAAC	
Beyond Knowledge	Kakapalayam (PO), Salem – 637 504	www.kiot.ac.in

Assessment for course on 3D modelling of Buildings using 3ds Max Design

17 18 20

1. What is full form of UI in Revit Architecture?
   a) User Interface Workflow
   b) User Interface
   c) User Interfere
   d) None of these
2. Which comprises six user-interface panels that give you access to most of the modeling features of 3ds Max, as well as some animation features, display choices, and miscellaneous utilities.
   a. Material
   b. Render
   c. Frame Rate
   d. Command Panel
3. A type of geometric model of a three-dimensional object in which the basic shape is made up of points, or vertices, connected by edges
   a) Maps
   b) NTSC
   c) SMPTE
   d) Mesh
4. Which is a single point in a graphic image.
   a) Faces
   b) Pixel
   c) Edge
   d) Spline
5. Which is the colour that an object reflects when illuminated by "good lighting??" Also referred to as its natural colour.
   a) Editable Poly
   b) Title Bar
   c) Specular colour
   d) Diffuse Colour
6. which records the beginning and end of each transformation of an object or element in the scene .
   a) Faces
   b) Vectors
   c) Keyframes
   d) Vertex
7. A wireframe box that encloses the extents of an object is called_____.
   a) Origin

PRINCIPAL,
Knowledge Institute of Technology
Kakapalayam (PO), Salem - 637 504

b) Bounding Box
c) Modifiers
d) Animation

8. Which is a setting or value that you can change.
a) SMPTE
b) Parameter
c) Frame Rate
d) Vertex

9. Which provides quick access to tools and dialog boxes for many of the most common tasks in 3DS Max.
a) Status Bar
b) Title Bar
c) Menu Bar
d) Main Toolbar

10. What is the display area of the user interface that allows you to view and manipulate the modifiers on an object.
a) Title Bar
b) Modifier Stack
c) Material
d) Modifiers

11. Area of the User Interface where the objects are displayed is called_____
a) Vectors
b) Gizmo
c) Viewport
d) ViewCube

12. An arbitrary point in space is used as the _____
a) Grids
b) Spline
c) Object
d) Origin

13. Which is used to replicate an image used as a map.
a) Tile
b) Pixel
c) Tweens
d) Edge

14. which is a straight or curved line that connects two vertices in a mesh object or spline.
a) Render
b) Vertex
c) Tile
d) Edge

PRINCIPAL,
Knowledge Institute of Technology
Kakapalayam (PO) Salem - 637 504

15. Images generated by the computer in between the keyframes is called_____
    a) Tweens
    b) Faces
    c) Tile
    d) Grids
16. Which viewport display setting that lets you view objects in a given viewport as a wire mesh.
    a) Wireframe
    b) Frame Rate
    c) ViewCube
    d) Workflow
17. Which contains information about the scene and the active command?
    a) Material
    b) Title Bar
    c) Status Bar
    d) Menu Bar
18. which is an icon-based menu available from any button that has a small black triangle
    a) Polygons
    b) Flyout
    c) Faces
    d) Object
19. A collection of vertices and connecting segments that form a line or curve is called_____.
    a) Tile
    b) Origin
    c) Spline
    d) SMPTE
20.
21. Which is the standard time display format for most professional animation work?
    a) Maps
    b) SMPTE
    c) Vertex
    d) Tile

PRINCIPAL,
Knowledge Institute of Technology
Kakapalayam (PO) Salem - 637 504

D. Bharathiraj
611216103084

	KNOWLEDGE INSTITUTE OF TECHNOLOGY	
	Approved by AICTE, Affiliated to Anna University, Accredited by NAAC	
Pursuit of Knowledge	Kakapalayam (PO), Salem – 637 504	www.kiot.ac.in

Assessment for course on 3D modelling of Buildings using 3ds Max Design

18/20

1. What is full form of UI in Revit Architecture?
   a) User Interface Workflow
   b) User Interface
   c) User Interfere
   d) None of these
2. Which comprises six user-interface panels that give you access to most of the modeling features of 3ds Max, as well as some animation features, display choices, and miscellaneous utilities.
   a. Material
   b. Render
   c. Frame Rate
   d. Command Panel
3. A type of geometric model of a three-dimensional object in which the basic shape is made up of points, or vertices, connected by edges
   a) Maps
   b) NTSC
   c) SMPTE
   d) Mesh
4. Which is a single point in a graphic image.
   a) Faces
   b) Pixel
   c) Edge
   d) Spline
5. Which is the colour that an object reflects when illuminated by "good lighting??" Also referred to as its natural colour.
   a) Editable Poly
   b) Title Bar
   c) Specular colour
   d) Diffuse Colour
6. which records the beginning and end of each transformation of an object or element in the scene .
   a) Faces
   b) Vectors
   c) Keyframes
   d) Vertex
7. A wireframe box that encloses the extents of an object is called_____.
   a) Origin

PRINCIPAL,
Knowledge Institute of Technology
Kakapalayam (PO) Salem - 637 504

b) Bounding Box
c) Modifiers
d) Animation

8. Which is a setting or value that you can change.
   a) SMPTE
   b) Parameter
   c) Frame Rate
   d) Vertex
9. Which provides quick access to tools and dialog boxes for many of the most common tasks in 3DS Max.
   a) Status Bar
   b) Title Bar
   c) Menu Bar
   d) Main Toolbar
10. What is the display area of the user interface that allows you to view and manipulate the modifiers on an object.
   a) Title Bar
   b) Modifier Stack
   c) Material
   d) Modifiers
11. Area of the User Interface where the objects are displayed is called_____
   a) Vectors
   b) Gizmo
   c) Viewport
   d) ViewCube
12. An arbitrary point in space is used as the _____
   a) Grids
   b) Spline
   c) Object
   d) Origin
13. Which is used to replicate an image used as a map.
   a) Tile
   b) Pixel
   c) Tweens
   d) Edge
14. which is a straight or curved line that connects two vertices in a mesh object or spline.
   a) Render
   b) Vertex
   c) Tile
   d) Edge

PRINCIPAL,
Knowledge Institute of Technology
Kakapalayam (PO), Salem - 637 504

15. Images generated by the computer in between the keyframes is called_____
    a) Tweens
    b) Faces
    c) Tile
    d) Grids
16. Which viewport display setting that lets you view objects in a given viewport as a wire mesh.
    a) Wireframe
    b) Frame Rate
    c) ViewCube
    d) Workflow
17. Which contains information about the scene and the active command?
    a) Material
    b) Title Bar
    c) Status Bar
    d) Menu Bar
18. which is an icon-based menu available from any button that has a small black triangle
    a) Polygons
    b) Flyout
    c) Faces
    d) Object
19. A collection of vertices and connecting segments that form a line or curve is called_____.
    a) Tile
    b) Origin
    c) Spline
    d) SMPTE
20.
21. Which is the standard time display format for most professional animation work?
    a) Maps
    b) SMPTE
    c) Vertex
    d) Tile

PRINCIPAL,
Knowledge Institute of Technology
Kakapalayam (PO) Salem - 63

K.C. Aishwarya
611216103001

KNOWLEDGE INSTITUTE OF TECHNOLOGY

Approved by AICTE, Affiliated to Anna University, Accredited by NAAC

Kakapalayam (PO), Salem – 637 504 | www.kiot.ac.in

Assessment for course on 3D modelling of Buildings using 3ds Max Design

20/20

1. What is full form of UI in Revit Architecture?
   a) User Interface Workflow
   b) User Interface
   c) User Interfere
   d) None of these
2. Which comprises six user-interface panels that give you access to most of the modeling features of 3ds Max, as well as some animation features, display choices, and miscellaneous utilities.
   a. Material
   b. Render
   c. Frame Rate
   d. Command Panel
3. A type of geometric model of a three-dimensional object in which the basic shape is made up of points, or vertices, connected by edges
   a) Maps
   b) NTSC
   c) SMPTE
   d) Mesh
4. Which is a single point in a graphic image.
   a) Faces
   b) Pixel
   c) Edge
   d) Spline
5. Which is the colour that an object reflects when illuminated by "good lighting??" Also referred to as its natural colour.
   a) Editable Poly
   b) Title Bar
   c) Specular colour
   d) Diffuse Colour
6. which records the beginning and end of each transformation of an object or element in the scene .
   a) Faces
   b) Vectors
   c) Keyframes
   d) Vertex
7. A wireframe box that encloses the extents of an object is called_____.
   a) Origin

PRINCIPAL,
Knowledge Institute of Technology
Kakapalayam (PO) Salem - 637 504

b) Bounding Box
c) Modifiers
d) Animation

8. Which is a setting or value that you can change.
   a) SMPTE
   b) Parameter
   c) Frame Rate
   d) Vertex
9. Which provides quick access to tools and dialog boxes for many of the most common tasks in 3DS Max.
   a) Status Bar
   b) Title Bar
   c) Menu Bar
   d) Main Toolbar
10. What is the display area of the user interface that allows you to view and manipulate the modifiers on an object.
   a) Title Bar
   b) Modifier Stack
   c) Material
   d) Modifiers
11. Area of the User Interface where the objects are displayed is called_____
   a) Vectors
   b) Gizmo
   c) Viewport
   d) ViewCube
12. An arbitrary point in space is used as the _____
   a) Grids
   b) Spline
   c) Object
   d) Origin
13. Which is used to replicate an image used as a map.
   a) Tile
   b) Pixel
   c) Tweens
   d) Edge
14. which is a straight or curved line that connects two vertices in a mesh object or spline.
   a) Render
   b) Vertex
   c) Tile
   d) Edge

PRINCIPAL,
Knowledge Institute of Technology
Kakapalayam (PO) Salem - 637 504

15. Images generated by the computer in between the keyframes is called_____
    a) Tweens
    b) Faces
    c) Tile
    d) Grids
16. Which viewport display setting that lets you view objects in a given viewport as a wire mesh.
    a) Wireframe
    b) Frame Rate
    c) ViewCube
    d) Workflow
17. Which contains information about the scene and the active command?
    a) Material
    b) Title Bar
    c) Status Bar
    d) Menu Bar
18. which is an icon-based menu available from any button that has a small black triangle
    a) Polygons
    b) Flyout
    c) Faces
    d) Object
19. A collection of vertices and connecting segments that form a line or curve is called_____.
    a) Tile
    b) Origin
    c) Spline
    d) SMPTE
20.
21. Which is the standard time display format for most professional animation work?
    a) Maps
    b) SMPTE
    c) Vertex
    d) Tile

PRINCIPAL,
Knowledge Institute of Technology
Kakapalayam (PO) Salem - 637 50

KNOWLEDGE INSTITUTE OF TECHNOLOGY

Approved by AICTE, Affiliated to Anna University, Accredited by NAAC

DEPARTMENT OF CIVIL ENGINEERING

CERTIFICATE

This is to certify that Mr/Ms P. Sushmithaa of III year student in academic year 2018-19 has completed the course on 3D Modelling of Buildings using 3ds Max Design during the period from 09/07/18 to 19/07/18 at Knowledge Institute of Technology, Salem.

PRINCIPAL,
Knowledge Institute of Technology
Kakapalayam (PO) Salem - 637 504

COURSE INSTRUCTOR

HOD/CIVIL

PRINCIPAL

KNOWLEDGE INSTITUTE OF TECHNOLOGY

Approved by AICTE, Affiliated to Anna University, Accredited by NAAC

DEPARTMENT OF CIVIL ENGINEERING

CERTIFICATE

This is to certify that Mr/Ms V. BoopathiRaj of III year student in academic year 2018-19 has completed the course on 3D Modelling of Buildings using 3ds Max Design during the period from 09/07/18 to 09/07/18 at Knowledge Institute of Technology, Salem.

PRINCIPAL,
Knowledge Institute of Technology
Kadapalavam (PO) Salem - 637 504

COURSE INSTRUCTOR

HOD/CIVIL

PRINCIPAL

KNOWLEDGE INSTITUTE OF TECHNOLOGY

Approved by AICTE, Affiliated to Anna University, Accredited by NAAC

DEPARTMENT OF CIVIL ENGINEERING

CERTIFICATE

This is to certify that Mr/Ms R. Jeevagan of iii year student in academic year 2018-19 has completed the course on 3D Modelling of Buildings using 3ds Max Design during the period from 09/07/18 to 19/07/18 at Knowledge Institute of Technology, Salem.

PRINCIPAL,
Knowledge Institute of Technology
... (PO) Salem - 637 ...

COURSE INSTRUCTOR

HOD/CIVIL

PRINCIPAL

KNOWLEDGE INSTITUTE OF TECHNOLOGY

Approved by AICTE, Affiliated to Anna University,Accredited by NAAC

DEPARTMENT OF CIVIL ENGINEERING

CERTIFICATE

This is to certify that Mr/Ms D. Bharathraj of III year student in academic year 2018-19 has completed the course on 3D Modelling of Buildings using 3ds Max Design during the period from 09/07/18 to 19/07/18 at Knowledge Institute of Technology,Salem.

PRINCIPAL,
Knowledge Institute of Technology
Kakapalayam (PO) Salem - 637 504

COURSE INSTRUCTOR

HOD/CIVIL

PRINCIPAL

KNOWLEDGE INSTITUTE OF TECHNOLOGY

Approved by AICTE, Affiliated to Anna University,Accredited by NAAC

DEPARTMENT OF CIVIL ENGINEERING

CERTIFICATE

This is to certify that Mr/Ms B.Aravinth of III year student in academic year 2018-19 has completed the course on 3D Modelling of Buildings using 3ds Max Design during the period from 09/07/18 to 19/07/18 at Knowledge Institute of Technology,Salem.

PRINCIPAL
Knowledge Institute of Technology
Kakapalayam (PO) Salem - 637 504

COURSE INSTRUCTOR | **HOD/CIVIL** | **PRINCIPAL**

KNOWLEDGE INSTITUTE OF TECHNOLOGY, SALEM
DEPARTMENT OF CIVIL ENGINEERING

FEEDBACK FORM

COURSE on 3D Modeling of Buildings using 3ds Max Design

Name: S. Sabari Year/Sem/Sec: III/VI

S.No	Feedback Questions	Good	Excellent	Moderate	Need to be improved
1	Course Content Delivery by the trainer	✓			
2	Course Material	✓			
3	Clarity of the content delivery	✓			
4	Hands on training experience		✓		
5	Overall experience about the Course	✓			

Suggestions if any:

Useful and informative

Student Sign:

PRINCIPAL,
Knowledge Institute of Technology
Kanalavam (PO), Salem - 637 504

KNOWLEDGE INSTITUTE OF TECHNOLOGY, SALEM
DEPARTMENT OF CIVIL ENGINEERING

FEEDBACK FORM
COURSE on 3D Modeling of Buildings using 3ds Max Design

Name: R. Bharath Year/Sem/Sec: IV/VII

S.No	Feedback Questions	Good	Excellent	Moderate	Need to be improved
1	Course Content Delivery by the trainer		✓		
2	Course Material	✓			
3	Clarity of the content delivery		✓		
4	Hands on training experience	✓			
5	Overall experience about the Course	✓			

Suggestions if any:

It is useful for my feature

Student Sign:

R. Bharath

PRINCIPAL,
Knowledge Institute of Technology
Kakapalayam (PO), Salem - 637 504

KNOWLEDGE INSTITUTE OF TECHNOLOGY, SALEM
DEPARTMENT OF CIVIL ENGINEERING

FEEDBACK FORM

COURSE on 3D Modeling of Buildings using 3ds Max Design

Name: K C Aiswariya Year/Sem/Sec: III / 05

S.No	Feedback Questions	Good	Excellent	Moderate	Need to be improved
1	Course Content Delivery by the trainer		✓		
2	Course Material	✓			
3	Clarity of the content delivery		✓		
4	Hands on training experience	✓			
5	Overall experience about the Course		✓		

Suggestions if any:

Very Good

Student Sign:

PRINCIPAL,
Knowledge Institute of Technology
Kakapalayam (PO), Salem - 637 504

KNOWLEDGE INSTITUTE OF TECHNOLOGY, SALEM
DEPARTMENT OF CIVIL ENGINEERING

FEEDBACK FORM
COURSE on 3D Modeling of Buildings using 3ds Max Design

Name: K. Harinisri Year/Sem/Sec: III/05

S.No	Feedback Questions	Good	Excellent	Moderate	Need to be improved
1	Course Content Delivery by the trainer		✓		
2	Course Material		✓		
3	Clarity of the content delivery	✓			
4	Hands on training experience		✓		
5	Overall experience about the Course	✓			

Suggestions if any:

Very Good and useful

Student Sign:

PRINCIPAL,
Knowledge Institute of Technology
Kakapalayam (PO), Salem - 637 504

KNOWLEDGE INSTITUTE OF TECHNOLOGY, SALEM
DEPARTMENT OF CIVIL ENGINEERING

FEEDBACK FORM

COURSE on 3D Modeling of Buildings using 3ds Max Design

Name: S. Lakshmi Year/Sem/Sec: III / 05

S.No	Feedback Questions	Good	Excellent	Moderate	Need to be improved
1	Course Content Delivery by the trainer	✓			
2	Course Material	✓			
3	Clarity of the content delivery		✓		
4	Hands on training experience	✓			
5	Overall experience about the Course		✓		

Suggestions if any:

The course given is useful

Student Sign:

PRINCIPAL,
Knowledge Institute of Technology
Kakapalayam (PO), Salem - 637 504

112-201819 - CE-03

KNOWLEDGE INSTITUTE OF TECHNOLOGY, SALEM-637504

DEPARTMENT OF CIVIL ENGINEERING

REPORT OF THE EVENT

Date	:	12.07.2018 to 23.07.2018	**Resource person**	:	P.M.Muthukrishnan, Course Instructor, Cadd square, Salem.
Time	:	10.00 am to 2.00pm	**Title**	:	Certification Course on **Analysis of structural members using Staad pro v8i**
Venue	:	CC10, D-Block, KIOT.	**No. of Participants**	:	40

1. This training has been organized to enhance the standard of fresh civil engineering graduates to become acceptable to the industry. STAAD.Pro is the most widely used software for structure designing processes. STAAD.Pro Foundation, STAAD.offshore, and RAM Concept for designing of foundations, offshore structures and steel connection tools are provided.
2. This software helps Civil Engineers and Project Engineers in analyzing and designing a wide array of structures.
3. STAAD.Pro v8i software has included both concrete and steel design together, thus making it a one-stop-point for building design. This software can also calculate the reinforcement for the concrete columns, beams and shear wall.
4. The veteran trainer shared his long term experiences in the design field and explained the importance of design of building.

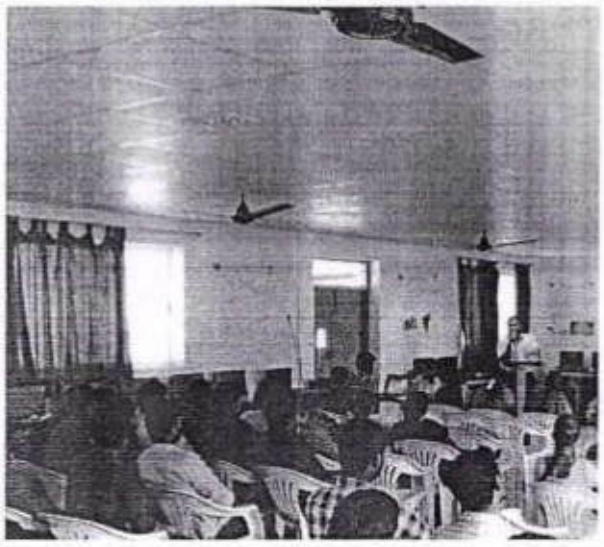

Encl: Circular / Brochure / Attendance Sheet

PRINCIPAL,
Knowledge Institute of Technology
Kakapalayam (PO), Salem - 637 504

KNOWLEDGE INSTITUTE OF TECHNOLOGY, SALEM - 637 504

CIRCULAR

Circular No.	CIVIL/CC/2018-19/03	**Date**	09.07.2018
To	IV Year CIVIL ENGINEERING students		
Subject	Certification Course on **Analysis of Structural members using Staad pro v8i** –reg.		
Circular issued by	Department of Civil Engineering.		

This is to inform you that Department of Civil Engineering has planned to conduct Certification Course on **Analysis of Structural members using Staad pro v8i** for IV year Civil Engineering students. Registered candidates are requested to attend the course and make use of the given opportunity.

SL. NO.	NAME OF THE PROGRAM	VENUE DATE & TIME	RESOURCE PERSON
1	Certification Course on **"Analysis of Structural members using Staad pro v8i"**	**CC10, D-Block, KIOT.** 12.07.2018 to 23.07.2018 10.00 am to 2.00pm	**Er. P.M. Muthukrishnan** Course Instructor, CAD SQUARE. Salem-4.

For Further Details Kindly Contact: Mr. S. Pradeep Kumar, AP/Civil (978707797)

SENDER		PRINCIPAL

MECH	VP Office	CIVIL	EEE	ECE	CSE	S&H	PD	LIB	EMS	AO	Trans-port I/C	Hostel NB	Director / Training	Director / Placement	Residential Warden		College NB	Office / File	Class Circula-tion	Security Office	KBS	Recep tion
															LH	GH						
•	•	•	•	•	•								•	•				•				

Checked by Principal office I/C		Verified by the sender	

File :

1) Principal Office :
2) Concerned issuing department :

PRINCIPAL,
Knowledge Institute of Technology
Kakapalayam (PO) Salem - 637 504

Certificate Course
on
Analysis of structural members using Staad Pro v8i

12.07.2018 to 23.07.2018

ORGANIZED BY

DEPARTMENT OF CIVIL ENGINEERING

KNOWLEDGE
INSTITUTE OF TECHNOLOGY
Accredited by NAAC

KIOT campus, Kakapalayam (PO), Salem-637 504,
Tamil Nadu, India.
www.kiot.ac.in

PRINCIPAL,
Knowledge Institute of Technology
Kakapalayam (PO), Salem - 637 504

ABOUT KIOT

Knowledge Institute of Technology is one of the upcoming Institutions in India. The college was established in the year 2009. Knowledge Institute of Technology is a brainchild of Eminent Professors from leading Engineering Colleges, Philanthropists, Friends and Entrepreneurs who would like to contribute in nation building by establishing higher learning Institutions. The cutting edge infrastructure, well experienced faculty and accomplished staff make KIOT as a Premier Centre for learning. The college offers 5 B.E. courses and 4 M.E. courses Accredited by NAAC. The vast experience of the promoters in training the students for all-round professionals and skill development ensures every student to transform into an evolved individual and a highly employable professional.

ABOUT THE DEPARTMENT OF CIVIL ENGINEERING

The Civil Engineering branch of KIOT was started in the year 2010-11. The faculty members are well experienced and qualified in different specializations. In the enhancement of research forum, the department has established a "Centre for Sustainable Building Research" and initiated the LEED Lab (Leadership in Energy and Environmental Design) in association with United States Green Building Council (USGBC) and Centre of Excellence on "Remote Sensing & GIS" in association with SAKURA for carrying out research, teaching and consultation activities in various disciplines of Civil Engineering. The vast experience of the promoters in training the students for all-round professionals and skill development ensures every student to transform into an evolved individual and a highly employable professional.

SYLLABUS

1.Introduction to Staad Pro v8i

Introduction, STAAD plane (member I incidence), STAAD space (joint coordinate method).

2. Objects

Translational repeat & circular repeat, copy, move, Beams & Structure wizard, Selection methods

3. Analysis of structural members

Analysis of beams, columns, truss, plates-Animation.

4. Design of structural members

Concrete design ,Design of beams & columns
Steel design

5.Report Creation

Design of footing, column and slab, Printing option, report setup, export @ import options.

Resource Person:
Er.P.M.Muthukrishnan,
Course Instructor,
Cadd Square, Salem.

For Registration Kindly Contact:
Mr. Pradeep Kumar S, AP/Civil,
M:+91978707797 ,
Mail: spkcivil@kiot.ac.in

From

22/06/2018, Salem

S.Pradeep Kumar,
Assistant Professor,
Department of civil engineering,
Knowledge Institute of Technology,
Salem- 637 504.

To

The Principal,
Knowledge Institute of Technology,
Salem- 637504.

Through,

Head of the Department/CIVIL

Respected Sir,

Subject: Requisition for Conducting Certification Course-Reg.

We have planned to conduct certification course on "**Analysis of Structural members using Staad pro V8i**". It will be helpful for our IV Year Civil Engineering students through which they can enrich their knowledge in Structural analysis and design for various buildings. In this regards we request you to endowment as permission to conduct the course. This course is not in our curriculum and will be helpful for the skill development and placement of our students.

The course details are as follows:

Description	Particulars
Year	IV (Civil Engineering Students)
Name of the Course	**Analysis of Structural members using Staad pro V8i**
Duration	12.07.2018 to 23.07.2018 (10 days)
Company/ Resource Person	**Er. P.M.Muthukrishnan,** Course Instructor, Cadd square, Salem
Total Number of Students Registered	**40** Nos.

Thank you sir

Yours truly,

(S.Pradeep Kumar)

HOD/CIVIL

PRINCIPAL,
Knowledge Institute of Technology
Kakapalayam (PO), Salem - 637 504.

PRINCIPAL

KNOWLEDGE INSTITUTE OF TECHNOLOGY

DEPARTMENT OF CIVIL ENGINEERING

REGISTERED STUDENTS FOR CERTIFICATION COURSE

The following students have been registered for the various certification courses conductd by the department of civil engineering for the AY 2018-19

S.No	Register No	Name of the student	Name of the certificate courses	Start Date	End Date	Duration Hrs (10 Days)
1	611215103001	ABDULRAHMAN N	Analysis of Structural members using Staad pro v8i	12-07-2018	23-07-2018	40
2	611215103003	AKILA R				
3	611215103006	ARAVIND KUMAR T				
4	611215103008	ARULMURUGAN L				
5	611215103010	DANUSHPRABHU S				
6	611215103012	DHAARIENIE M R				
7	611215103013	DHANUSH KUMAR S				
8	611215103015	DIVYAA M				
9	611215103016	GANESH SHANKAR R				
10	611215103017	GAYATHRI S				
11	611215103020	HEMALATHA P				
12	611215103021	HEMAVARTHINI M V				
13	611215103024	KARTHIKA R				
14	611215103025	KAVIYA M P				
15	611215103026	KEERTHANA M				
16	611215103027	MAHILESH A				
17	611215103030	MOHANKUMAR A				
18	611215103032	NANDHINI J K				
19	611215103034	NEYA S				
20	611215103035	OBULIEVIGNESH S				
21	611215103036	OBULIVIGNESH V				
22	611215103038	RAMAKRISHNAN S				
23	611215103040	SAKTHIVEL S				
24	611215103042	SANTHOSH KUMAR V				

PRINCIPAL,
Knowledge Institute of Technology
Kakapalayam (PO), Salem - 637 504

S.No	Register No	Name of the student	Name of the certificate courses	Start Date	End Date	Duration Hrs (10 Days)
25	611215103043	SARAVANAN R	Analysis of Structural members using Staad pro v8i	12-07-2018	23-07-2018	40
26	611215103045	SHAHINA THASLIM M				
27	611215103046	SHRINATH A				
28	611215103050	TAMILSELVAN M R				
29	611215103052	UDHAYAPRIYA A				
30	611215103053	VIGNESH P				
31	611215103301	ARUN PRASATH S				
32	611215103302	ASWIN P				
33	611215103303	GIRINATH S				
34	611215103306	LOGARAJ G				
35	611215103307	NAGABALAJI B				
36	611215103308	PERUMAL K				
37	611215103309	RAVIVARMA M				
38	611215103310	REVGIRI D				
39	611215103313	SOWMYA M				
40	611215103701	YUGAPPRIYADHARSHINI R				

COURSE CO-ORDINATOR

HOD/CIVIL

PRINCIPAL,
Knowledge Institute of Technology
Kakapalayam (PO), Salem - 637 504

KNOWLEDGE INSTITUTE OF TECHNOLOGY Department of Civil Engineering Course Plan			
Name of the Course	**Analysis of structural members using Staad Pro vi8**	**Semester**	07
Level-1 Module	05	Number of Hours	40 hours

EXECUTION SCHEDULE

Module No.	Name of the Module LEVEL 1	No. of Hours
1	Introduction, STAAD plane (member incidence)STAAD space (joint coordinate method)	16
2	Translational repeat & circular repeat, copy, move, Beams & Structure wizard, Selection methods	16
3	Analysis of beams, columns, truss, plates-Animation	16
4	Concrete design ,Design of beams & columns Steel design	16
5	Design of footing, column and slab, Printing option, report setup, export @ import options	16

PRINCIPAL,
Knowledge Institute of Technology
Kakapalayam (PO) Salem - 637 504

Detailed Execution Plan

Name of the Course Module: 1. Introduction to Staad pro vi8

Duration: 08 hours

Module No.	Name of the Module	Teaching Hours	Practical Hours	Self-Study Hours	Course Plan (Day wise)
1	Introduction, STAAD plane, (member incidence)STAAD space (joint coordinate method)	4	4	-	Day 1 and Day 2

Detailed Execution Plan

Name of the Course Module: 2. Selection of members

Duration: 08 hours

Module No.	Name of the Module	Teaching Hours	Practical Hours	Self-Study Hours	Course Plan (Day wise)
2	Translational repeat & circular repeat, copy, move, Beams & Structure wizard, Selection methods	4	4	-	Day 3 and Day 4

Detailed Execution Plan

Name of the Course Module: 3. Analysis

Duration: 08 hours

Module No.	Name of the Module	Teaching Hours	Practical Hours	Self-Study Hours	Course Plan (Day wise)
3	Analysis of beams, columns, truss, plates-Animation	4	4	-	Day 5 And Day 6

PRINCIPAL,
Knowledge Institute of Technology
Kakapalayam (PO) Salem - 637 504

Detailed Execution Plan

Name of the Course Module: 4. Design of Concrete and Steel

Duration: 08

Module No.	Name of the Module	Teaching Hours	Practical Hours	Self-Study Hours	Course Plan (Day wise)
4	Concrete design ,Design of beams & columns Steel design	4	4	-	Day 7 And Day 8

Detailed Execution Plan

Name of the Course Module: 5. Printing of Data

Duration: 08

Module No.	Name of the Module	Teaching Hours	Practical Hours	Self-Study Hours	Course Plan (Day wise)
5	Design of footing, column and slab, Printing option, report setup, export @ import options	4	4	-	Day 9 and Day 10

FACULTY I/c

P.M.S

HOD CIVIL

PRINCIPAL,
Knowledge Institute of Technology
Kakapalayam (PO), Salem - 637 504

KNOWLEDGE INSTITUTE OF TECHNOLOGY

DEPARTMENT OF CIVIL ENGINEERING

Course on Analysis of Structural members using Staad pro v8i

ATTENDANCE REPORT

S.No	Register No	Name of the student	12.7.18	13.7.18	14.7.18	15.7.18	16.7.18	17.7.18	18.7.18	19.7.18	20.7.18	21.7.18	22.7.18	23.7.18
1	611215103001	ABDULRAHMAN N	/	/	/	/	/	/	/	/	/	/	/	/
2	611215103003	AKILA R	/	/	/	/	/	/	/	/	/	/	/	/
3	611215103006	ARAVIND KUMAR T	/	/	/	/	/	/	/	/	/	/	/	/
4	611215103008	ARULMURUGAN L	/	/	/	/	/	/	/	/	/	/	/	/
5	611215103010	DANUSHPRABHU S	/	/	/	/	/	/	/	/	/	A	/	A
6	611215103012	DHAARIENIE M R	/	/	/	/	/	/	/	/	/	/	/	/
7	611215103013	DHANUSH KUMAR S	/	/	/	/	/	/	/	/	/	/	/	/
8	611215103015	DIVYAA M	/	/	/	/	/	/	/	/	/	/	/	/
9	611215103016	GANESH SHANKAR R	/	/	/	/	/	/	A	/	/	/	/	/
10	611215103017	GAYATHRI S	/	/	/	/	/	/	/	/	/	/	A	A
11	611215103020	HEMALATHA P	/	/	/	/	/	/	/	/	/	/	/	/
12	611215103021	HEMAVARTHINI M V	/	/	/	/	/	/	/	/	/	/	/	/
13	611215103024	KARTHIKA R	/	/	/	/	A	/	/	/	/	/	/	/
14	611215103025	KAVIYA M P	/	/	A	/	/	/	/	/	/	/	/	/
15	611215103026	KEERTHANA M	/	/	/	/	/	/	/	/	/	/	/	/
16	611215103027	MAHILESH A	A	/	/	/	/	/	/	/	/	/	/	/
17	611215103030	MOHANKUMAR A	/	/	/	/	/	/	/	/	/	/	/	/
18	611215103032	NANDHINI J K	/	/	/	/	/	/	/	/	/	/	/	/
19	611215103034	NEYA S	/	/	/	/	/	/	/	/	A	/	/	/
20	611215103035	OBULIEVIGNESH S	/	/	/	/	/	/	/	A	/	/	/	/
21	611215103036	OBULIVIGNESH V	/	/	/	A	/	A	/	/	/	/	/	/
22	611215103038	RAMAKRISHNAN S	/	/	/	/	/	/	/	/	/	/	/	/
23	611215103040	SAKTHIVEL S	/	/	/	/	/	/	/	/	/	A	/	/
24	611215103042	SANTHOSH KUMAR V	/	A	/	/	/	/	/	/	/	/	/	/
25	611215103043	SARAVANAN R	A	/	/	/	/	/	/	/	/	/	/	/
26	611215103045	SHAHINA THASLIM M	/	/	/	/	/	/	/	/	/	/	/	/
27	611215103046	SHRINATH A	/	/	/	/	/	/	/	/	/	/	A	/
28	611215103050	TAMILSELVAN M R	/	/	/	/	/	/	/	/	/	/	/	/
29	611215103052	UDHAYAPRIYA A	/	/	/	/	/	/	/	/	/	/	/	/
30	611215103053	VIGNESH P	/	/	/	/	/	/	/	/	/	/	/	/

PRINCIPAL,
Knowledge Institute of Technology
Kakapalayam (PO), Salem - 637 504

31	611215103301	ARUN PRASATH S	/	/	/	/	/	/	/	/	/	/	/	/	/
32	611215103302	ASWIN P	/	/	/	/	/	/	/	/	/	/	/	/	/
33	611215103303	GIRINATH S	/	/	/	/	/	/	/	/	/	/	/	/	/
34	611215103306	LOGARAJ G	/	/	/	/	/	/	/	/	/	/	/	/	/
35	611215103307	NAGABALAJI B	/	/	/	/	/	/	/	/	a	/	/	/	/
36	611215103308	PERUMAL K	/	/	a	a	/	/	/	/	/	a	/	/	/
37	611215103309	RAVIVARMA M	/	/	/	/	/	a	/	/	/	/	/	/	/
38	611215103310	REVGIRI D	/	/	/	/	/	/	/	/	/	/	/	/	/
39	611215103313	SOWMYA M	/	/	/	/	/	/	/	/	/	/	/	/	/
40	611215103701	YUGAPPRIYADHARSHINI R	/	/	/	/	/	/	/	/	/	/	/	/	/
41	611214103304	JOSEPHINEPHILOMINA J	/	a	/	/	/	/	/	/	/	/	/	a	/
42	611214103305	KAVIPRIYA S	/	/	/	/	/	/	/	/	/	/	/	/	/
43	611214103306	NAVEEN V	/	/	/	/	/	/	/	/	/	/	/	/	/
44	611214103307	SARAVANAN J	/	/	/	/	a	/	a	a	/	a	/	/	/
45	611214103309	THANGAVEL K	/	/	/	/	/	/	/	/	/	/	/	/	/
Total No of Students			45	45	45	45	45	45	45	45	45	45	45	45	45
No of Students Present			43	43	43	43	43	43	43	43	42	41	42	43	43
No of Students Absent			2	2	2	2	2	2	2	02	3	4	3	2	2

COURSE CO-ORDINATOR

HOD/CIVIL

PRINCIPAL,
Knowledge Institute of Technology
Kakkapalayam (PO) Salem - 637 504

KNOWLEDGE INSTITUTE OF TECHNOLOGY
DEPARTMENT OF CIVIL ENGINEERING
Course on Analysis of Structural members using Staad pro v8i
ASSESSMENT REPORT

S.No	Register No	Name of the student	Marks
1	611215103001	ABDULRAHMAN N	20
2	611215103003	AKILA R	19
3	611215103006	ARAVIND KUMAR T	18
4	611215103008	ARULMURUGAN L	20
5	611215103010	DANUSHPRABHU S	20
6	611215103012	DHAARIENIE M R	19
7	611215103013	DHANUSH KUMAR S	19
8	611215103015	DIVYAA M	20
9	611215103016	GANESH SHANKAR R	19
10	611215103017	GAYATHRI S	18
11	611215103020	HEMALATHA P	20
12	611215103021	HEMAVARTHINI M V	20
13	611215103024	KARTHIKA R	19
14	611215103025	KAVIYA M P	19
15	611215103026	KEERTHANA M	20
16	611215103027	MAHILESH A	19
17	611215103030	MOHANKUMAR A	18
18	611215103032	NANDHINI J K	20
19	611215103034	NEYA S	20
20	611215103035	OBULIEVIGNESH S	19
21	611215103036	OBULIVIGNESH V	19
22	611215103038	RAMAKRISHNAN S	20
23	611215103040	SAKTHIVEL S	19
24	611215103042	SANTHOSH KUMAR V	18
25	611215103043	SARAVANAN R	20
26	611215103045	SHAHINA THASLIM M	20
27	611215103046	SHRINATH A	20
28	611215103050	TAMILSELVAN M R	19
29	611215103052	UDHAYAPRIYA A	19
30	611215103053	VIGNESH P	20
31	611215103301	ARUN PRASATH S	19
32	611215103302	ASWIN P	18

Principal,
Knowledge Institute of Technology
Kanjikovil (Po), Salem-637 504

S.No	Register No	Name of the student	Marks
33	611215103303	GIRINATH S	20
34	611215103306	LOGARAJ G	20
35	611215103307	NAGABALAJI B	20
36	611215103308	PERUMAL K	19
37	611215103309	RAVIVARMA M	19
38	611215103310	REVGIRI D	20
39	611215103313	SOWMYA M	19
40	611215103701	YUGAPPRIYADHARSHINI R	18

COURSE CO-ORDINATOR

HOD/CIVIL

Principal,
Knowledge Institute of Technology
Kakapalayam (Po), Salem-637 504.

S. Kavipriya
IV year

KNOWLEDGE INSTITUTE OF TECHNOLOGY
Approved by AICTE, Affiliated to Anna University, Accredited by NAAC and NBA (B.E : Mech., ECE, EEE & CSE)
Kakapalayam (PO), Salem – 637 504 www.kiot.ac.in

Assessment for course on Analysis of structural members using Staad pro v8i

18/20 23/7/18

1. In floor load, Y is the :
   (A) Affective height
   B) Floor height
   C) Building height
   D) All of the Above
2. In Concentrated Load, P is :
   A) All of the above
   B) Force Direction
   (C) Perpendicular distance from the member
   D) Value of Load
3. For Plates, Which one of the following is true?
   A) In order to release a Plate you can release the Beams holding the plate
   (B) You can release the Nodes of the Plates.
   C) You can release more than one Nodes of the Plates.
   D) Options B & C.
4. B.E.A.V.A supports
   A) UK BS 5400
   B) IRC chapter 2
   (C) IS 456
   D) All of the Above
5. STAAD.Pro Perform Analysis is:
   A) Taking into consideration the Displacement of Nodes
   B) Taking into consideration the Stiffness Corection
   C) Multi- Iteration Analysis
   (D) None of the Above
6. Dead loads are self-weights of material, equipment, or components that are relatively constant throughout the structure's life.Marks 1
   A) true
   (B) false
7. In Meshing Parametric dialog box, by default, bias value is ___ and divi value is ___.
   A) Bias is 1 Divi is 15
   B) Bias is 1 Divi is 11
   (C) Bias is 2 Divi is 10
   D) Bias is 1 Divi is 10

PRINCIPAL,
Knowledge Institute of Technology
Kakapalayam (PO), Salem - 637 504

8. You can also edit the parameters in structure wizards models
   A) true
   B) false
9. . Which of the following sub-pages are in Foundation Plan Pages?
   A) Linear Grid Setting
   B) Radial Grid Setup
   C) Column Positioning
   D) Column Dimension and width
10. 10. How many types of meshing we have in STAAD.Pro?
   A) 1
   B) 2
   C) 5
   D) 4
11. By default, Response Reduction Factor Value for Special RC Moment Resisting Frame is?
   A) 1
   B) 3
   C) 6
   D) 5
12. The _____ group allows you to change the display of load arrows.
   A) Modeling Scale
   B) Loading Scale
   C) Displacement
   D) Result Scales
13. In track parameter, we have which of the following values?
   A) 2,3,4
   B) 0,1,2
   C) 1,0,2
   D) 1,2,3

14. How many types of Models are available in the Structure Wizard?
   A) 5
   B) 8
   C) 7
   D) 6
15. In concrete design parameter, by default, value for clt (Clear Cover top) is:
   A) 25mm
   B) 12mm
   C) 30mm
   D) 20mm
16. The minimum and maximum limits of number of divisions of each side are 1 to 100.
   A) true
   B) false

PRINCIPAL
Knowledge Institute of Technology
Kakapalayam (PO), Salem - 637 504

17. With the help of which of the following functions, you can duplicate Nodes, Beams, and Plates, in the direction of X,Y,Z?

(A) Circular Repeat
B) Mirror
C) Translational Repeat
D) Insert Nodes

18. Indian Standard Criteria for Earthquake Resistant design of Structure is?

(A) Is 1893-2003
B) Is 1893-2002
C) Is 1892-2005
D) Is 1892-2003

19. In how many ways can we assign support to Nodes?

A) 1
(B) 4
C) 2
D) 5

20. Pinned Support will have _____ reactions.Marks 1

A) 2
B) 6
(C) 4
D) 3

PRINCIPAL,
Knowledge Institute of Technology
Kakapalayam (PO) Salem - 637 504

R. Saravanan

KNOWLEDGE INSTITUTE OF TECHNOLOGY

Approved by AICTE, Affiliated to Anna University, Accredited by NAAC and NBA (B.E : Mech., ECE, EEE & CSE)

Kakapalayam (PO), Salem – 637 504 www.kiot.ac.in

Assessment for course on Analysis of structural members using Staad pro v8i

19/20

23/7/18

1. In floor load, Y is the :
   - A) Affective height
   - (B) Floor height
   - C) Building height
   - D) All of the Above
2. In Concentrated Load, P is :
   - A) All of the above
   - B) Force Direction
   - (C) Perpendicular distance from the member
   - D) Value of Load
3. For Plates, Which one of the following is true?
   - A) In order to release a Plate you can release the Beams holding the plate
   - B) You can release the Nodes of the Plates.
   - (C) You can release more than one Nodes of the Plates.
   - D) Options B & C.
4. B.E.A.V.A supports
   - A) UK BS 5400
   - (B) IRC chapter 2
   - C) IS 456
   - D) All of the Above
5. STAAD.Pro Perform Analysis is:
   - A) Taking into consideration the Displacement of Nodes
   - (B) Taking into consideration the Stiffness Corection
   - C) Multi- Iteration Analysis
   - D) None of the Above
6. Dead loads are self-weights of material, equipment, or components that are relatively constant throughout the structure's life.Marks 1
   - A) true
   - (B) false
7. In Meshing Parametric dialog box, by default, bias value is ___ and divi value is ___.
   - A) Bias is 1 Divi is 15
   - B) Bias is 1 Divi is 11
   - C) Bias is 2 Divi is 10
   - (D) Bias is 1 Divi is 10

PRINCIPAL,
Knowledge Institute of Technology
Kakapalayam (PO), Salem - 637 504

8. You can also edit the parameters in structure wizards models
   A) true
   (B) false
9. . Which of the following sub-pages are in Foundation Plan Pages?
   A) Linear Grid Setting
   B) Radial Grid Setup
   (C) Column Positioning
   D) Column Dimension and width
10. 10. How many types of meshing we have in STAAD.Pro?
   A) 1
   B) 2
   (C) 5
   D) 4
11. By default, Response Reduction Factor Value for Special RC Moment Resisting Frame is?
   A) 1
   B) 3
   C) 6
   (D) 5
12. The _____ group allows you to change the display of load arrows.
   A) Modeling Scale
   (B) Loading Scale
   C) Displacement
   D) Result Scales
13. In track parameter, we have which of the following values?
   (A) 2,3,4
   B) 0,1,2
   C) 1,0,2
   D) 1,2,3
14. How many types of Models are available in the Structure Wizard?
   (A) 5
   B) 8
   C) 7
   D) 6
15. In concrete design parameter, by default, value for clt (Clear Cover top) is:
   (A) 25mm
   B) 12mm
   C) 30mm
   D) 20mm
16. The minimum and maximum limits of number of divisions of each side are 1 to 100.
   (A) true
   B) false

PRINCIPAL,
Knowledge Institute of Technology
Kakapalayam (PO) Salem - 637 504

17. With the help of which of the following functions, you can duplicate Nodes, Beams, and Plates, in the direction of X,Y,Z?
    A) Circular Repeat
    B) Mirror
    C) Translational Repeat
    D) Insert Nodes
18. Indian Standard Criteria for Earthquake Resistant design of Structure is?
    A) Is 1893-2003
    B) Is 1893-2002
    C) Is 1892-2005
    D) Is 1892-2003
19. In how many ways can we assign support to Nodes?
    A) 1
    B) 4
    C) 2
    D) 5
20. Pinned Support will have _____ reactions.Marks 1
    A) 2
    B) 6
    C) 4
    D) 3

PRINCIPAL,
Knowledge Institute of Technology
Kakapalayam (PO), Salem - 637 504

Abdul Rahman
IV - year

KNOWLEDGE INSTITUTE OF TECHNOLOGY
Approved by AICTE, Affiliated to Anna University, Accredited by NAAC and NBA (B.E : Mech., ECE, EEE & CSE)
Kakapalayam (PO), Salem – 637 504 www.kiot.ac.in

Assessment for course on Analysis of structural members using Staad pro v8i

19/20 23/7/18

1. In floor load, Y is the :
   A) Affective height
   B) Floor height
   C) Building height
   D) All of the Above
2. In Concentrated Load, P is :
   A) All of the above
   B) Force Direction
   C) Perpendicular distance from the member
   D) Value of Load
3. For Plates, Which one of the following is true?
   A) In order to release a Plate you can release the Beams holding the plate
   B) You can release the Nodes of the Plates.
   C) You can release more than one Nodes of the Plates.
   D) Options B & C.
4. B.E.A.V.A supports
   A) UK BS 5400
   B) IRC chapter 2
   C) IS 456
   D) All of the Above
5. STAAD.Pro Perform Analysis is:
   A) Taking into consideration the Displacement of Nodes
   B) Taking into consideration the Stiffness Corection
   C) Multi- Iteration Analysis
   D) None of the Above
6. Dead loads are self-weights of material, equipment, or components that are relatively constant throughout the structure's life.Marks 1
   A) true
   B) false
7. In Meshing Parametric dialog box, by default, bias value is ___ and divi value is ___.
   A) Bias is 1 Divi is 15
   B) Bias is 1 Divi is 11
   C) Bias is 2 Divi is 10
   D) Bias is 1 Divi is 10

PRINCIPAL,
Knowledge Institute of Technology
Kakapalayam (PO) Salem - 637 504

8. You can also edit the parameters in structure wizards models
   A) true
   B) false
9. . Which of the following sub-pages are in Foundation Plan Pages?
   A) Linear Grid Setting
   B) Radial Grid Setup
   C) Column Positioning
   D) Column Dimension and width
10. 10. How many types of meshing we have in STAAD.Pro?
   A) 1
   B) 2
   C) 5
   D) 4
11. By default, Response Reduction Factor Value for Special RC Moment Resisting Frame is?
   A) 1
   B) 3
   C) 6
   D) 5
12. The _____ group allows you to change the display of load arrows.
   A) Modeling Scale
   B) Loading Scale
   C) Displacement
   D) Result Scales
13. In track parameter, we have which of the following values?
   A) 2,3,4
   B) 0,1,2
   C) 1,0,2
   D) 1,2,3

14. How many types of Models are available in the Structure Wizard?
   A) 5
   B) 8
   C) 7
   D) 6
15. In concrete design parameter, by default, value for clt (Clear Cover top) is:
   A) 25mm
   B) 12mm
   C) 30mm
   D) 20mm
16. The minimum and maximum limits of number of divisions of each side are 1 to 100.
   A) true
   B) false

PRINCIPAL,
Knowledge Institute of Technology
Kakapalayam (PO), Salem - 637 504

17. With the help of which of the following functions, you can duplicate Nodes, Beams, and Plates, in the direction of X,Y,Z?
    A) Circular Repeat
    B) Mirror
    C) Translational Repeat
    D) Insert Nodes
18. Indian Standard Criteria for Earthquake Resistant design of Structure is?
    A) Is 1893-2003
    B) Is 1893-2002
    C) Is 1892-2005
    D) Is 1892-2003
19. In how many ways can we assign support to Nodes?
    A) 1
    B) 4
    C) 2
    D) 5
20. Pinned Support will have _____ reactions.Marks 1
    A) 2
    B) 6
    C) 4
    D) 3

PRINCIPAL,
Knowledge Institute of Technology
Kanjikovil (PO), Salem - 637 504

T. ARAVIND KUMAR

	KNOWLEDGE INSTITUTE OF TECHNOLOGY	
	Approved by AICTE, Affiliated to Anna University, Accredited by NAAC	
	Kakapalayam (PO), Salem – 637 504	www.kiot.ac.in

Assessment for course on Analysis of structural members using Staad pro v8i

20/20 23/7/18

1. In floor load, Y is the :
   A) Affective height
   B) Floor height
   C) Building height
   D) All of the Above
2. In Concentrated Load, P is :
   A) All of the above
   B) Force Direction
   C) Perpendicular distance from the member
   D) Value of Load
3. For Plates, Which one of the following is true?
   A) In order to release a Plate you can release the Beams holding the plate
   B) You can release the Nodes of the Plates.
   C) You can release more than one Nodes of the Plates.
   D) Options B & C.
4. B.E.A.V.A supports
   A) UK BS 5400
   B) IRC chapter 2
   C) IS 456
   D) All of the Above
5. STAAD.Pro Perform Analysis is:
   A) Taking into consideration the Displacement of Nodes
   B) Taking into consideration the Stiffness Corection
   C) Multi- Iteration Analysis
   D) None of the Above
6. Dead loads are self-weights of material, equipment, or components that are relatively constant throughout the structure's life.Marks 1
   A) true
   B) false
7. In Meshing Parametric dialog box, by default, bias value is ___ and divi value is ___.
   A) Bias is 1 Divi is 15
   B) Bias is 1 Divi is 11
   C) Bias is 2 Divi is 10
   D) Bias is 1 Divi is 10

PRINCIPAL,
Knowledge Institute of Technology
Kakapalayam (PO) Salem - 637 504

8. You can also edit the parameters in structure wizards models
   A) true
   B) false
9. . Which of the following sub-pages are in Foundation Plan Pages?
   A) Linear Grid Setting
   B) Radial Grid Setup
   C) Column Positioning
   D) Column Dimension and width
10. 10. How many types of meshing we have in STAAD.Pro?
   A) 1
   B) 2
   C) 5
   D) 4
11. By default, Response Reduction Factor Value for Special RC Moment Resisting Frame is?
   A) 1
   B) 3
   C) 6
   D) 5
12. The _____ group allows you to change the display of load arrows.
   A) Modeling Scale
   B) Loading Scale
   C) Displacement
   D) Result Scales
13. In track parameter. we have which of the following values?
   A) 2,3,4
   B) 0,1,2
   C) 1,0,2
   D) 1,2,3

14. How many types of Models are available in the Structure Wizard?
   A) 5
   B) 8
   C) 7
   D) 6
15. In concrete design parameter. by default. value for clt (Clear Cover top) is:
   A) 25mm
   B) 12mm
   C) 30mm
   D) 20mm
16. The minimum and maximum limits of number of divisions of each side are 1 to 100.
   A) true

PRINCIPAL,
Knowledge Institute of Technology,
Kakapalayam (PO), Salem - 6.

B) false

17. With the help of which of the following functions, you can duplicate Nodes, Beams, and Plates, in the direction of X,Y,Z?
    A) Circular Repeat
    B) Mirror
    C) Translational Repeat
    D) Insert Nodes
18. Indian Standard Criteria for Earthquake Resistant design of Structure is?
    A) Is 1893-2003
    B) Is 1893-2002
    C) Is 1892-2005
    D) Is 1892-2003
19. In how many ways can we assign support to Nodes?
    A) 1
    B) 4
    C) 2
    D) 5
20. Pinned Support will have _____ reactions.Marks 1
    A) 2
    B) 6
    C) 4
    D) 3

PRINCIPAL.
Knowledge Institute of Technology
Kakapalayam (PO), Salem - 637 5[illegible]

S.Neya

KNOWLEDGE INSTITUTE OF TECHNOLOGY

Approved by AICTE, Affiliated to Anna University

Kakapalayam (PO), Salem – 637 504 www.kiot.ac.in

Assessment for course on Analysis of structural members using Staad pro v8i

1. In floor load, Y is the :
   A) Affective height
   B) Floor height
   C) Building height
   D) All of the Above
2. In Concentrated Load, P is :
   A) All of the above
   B) Force Direction
   C) Perpendicular distance from the member
   D) Value of Load
3. For Plates, Which one of the following is true?
   A) In order to release a Plate you can release the Beams holding the plate
   B) You can release the Nodes of the Plates.
   C) You can release more than one Nodes of the Plates.
   D) Options B & C.
4. B.E.A.V.A supports
   A) UK BS 5400
   B) IRC chapter 2
   C) IS 456
   D) All of the Above
5. STAAD.Pro Perform Analysis is:
   A) Taking into consideration the Displacement of Nodes
   B) Taking into consideration the Stiffness Corection
   C) Multi- Iteration Analysis
   D) None of the Above
6. Dead loads are self-weights of material, equipment, or components that are relatively constant throughout the structure's life.Marks 1
   A) true
   B) false
7. In Meshing Parametric dialog box, by default, bias value is ___ and divi value is ___.
   A) Bias is 1 Divi is 15
   B) Bias is 1 Divi is 11
   C) Bias is 2 Divi is 10
   D) Bias is 1 Divi is 10

PRINCIPAL,
Knowledge Institute of Technology
Kakapalayam (PO) Salem - 637 504

8. You can also edit the parameters in structure wizards models
   A) true
   B) false
9. . Which of the following sub-pages are in Foundation Plan Pages?
   A) Linear Grid Setting
   B) Radial Grid Setup
   C) Column Positioning
   D) Column Dimension and width
10. 10. How many types of meshing we have in STAAD.Pro?
   A) 1
   B) 2
   C) 5
   D) 4
11. By default, Response Reduction Factor Value for Special RC Moment Resisting Frame is?
   A) 1
   B) 3
   C) 6
   D) 5
12. The _____ group allows you to change the display of load arrows.
   A) Modeling Scale
   B) Loading Scale
   C) Displacement
   D) Result Scales
13. In track parameter, we have which of the following values?
   A) 2,3,4
   B) 0,1,2
   C) 1,0,2
   D) 1,2,3

14. How many types of Models are available in the Structure Wizard?
   A) 5
   B) 8
   C) 7
   D) 6
15. In concrete design parameter, by default, value for clt (Clear Cover top) is:
   A) 25mm
   B) 12mm
   C) 30mm
   D) 20mm
16. The minimum and maximum limits of number of divisions of each side are 1 to 100.
   A) true

PRINCIPAL,
Knowledge Institute of Technology
Kakapalayam (PO) Salem - 637 504

B) false

17. With the help of which of the following functions, you can duplicate Nodes, Beams, and Plates, in the direction of X,Y,Z?
    A) Circular Repeat
    B) Mirror
    C) Translational Repeat
    D) Insert Nodes
18. Indian Standard Criteria for Earthquake Resistant design of Structure is?
    A) Is 1893-2003
    B) Is 1893-2002
    C) Is 1892-2005
    D) Is 1892-2003
19. In how many ways can we assign support to Nodes?
    A) 1
    B) 4
    C) 2
    D) 5
20. Pinned Support will have _____ reactions.Marks 1
    A) 2
    B) 6
    C) 4
    D) 3

PRINCIPAL,
Knowledge Institute of Technology
Kakapalayam (PO) Salem - 637 504

Beyond Knowledge

KNOWLEDGE INSTITUTE OF TECHNOLOGY

Approved by AICTE, Affiliated to Anna University ,Accredited by NAAC

DEPARTMENT OF CIVIL ENGINEERING

CERTIFICATE

This is to certify that Mr/Ms M. Keerthana of IV year student in academic year 2018 - 19 has completed the course on Analysis of Structural Members using Staad Pro Vsi during the period from 12/7/18 to 23/7/18 at Knowledge Institute of Technology, Salem.

PRINCIPAL,
Knowledge Institute of Technology
Kakapalayam (PO), Salem - 637 504

P.M. Nyathanthan
COURSE INSTRUCTOR

G. Sivas
HOD/CIVIL

PRINCIPAL

Beyond Knowledge

KNOWLEDGE INSTITUTE OF TECHNOLOGY

Approved by AICTE, Affiliated to Anna University ,Accredited by NAAC

DEPARTMENT OF CIVIL ENGINEERING

CERTIFICATE

This is to certify that Mr/Ms R. Akila of IV year student in academic year 2018-19 has completed the course on Analysis of Structural Members using Staad Pro Vsi during the period from 12/7/18 to 23/7/18 at Knowledge Institute of Technology, Salem.

PRINCIPAL
Knowledge Institute of Technology
Kakapalayam (PO) Salem - 637 504

P.M. Muthukumar
COURSE INSTRUCTOR

G. Ruiz
HOD/CIVIL

PRINCIPAL

Beyond Knowledge

KNOWLEDGE INSTITUTE OF TECHNOLOGY

Approved by AICTE, Affiliated to Anna University ,Accredited by NAAC

DEPARTMENT OF CIVIL ENGINEERING

CERTIFICATE

This is to certify that Mr/Ms S. Ramakrishnan of IV year student in academic year 2018 - 19 has completed the course on Analysis of Structural Members using Staad Pro Vai during the period from 12/7/18 to 23/07/18 at Knowledge Institute of Technology, Salem.

PRINCIPAL,
Knowledge Institute of Technology
Kakapalayam (PO) Salem - 637 5

COURSE INSTRUCTOR	HOD/CIVIL	PRINCIPAL

Beyond Knowledge

KNOWLEDGE INSTITUTE OF TECHNOLOGY

Approved by AICTE, Affiliated to Anna University ,Accredited by NAAC

DEPARTMENT OF CIVIL ENGINEERING

CERTIFICATE

This is to certify that Mr/Ms M. Shahina Thaslim of IV year student in academic year 2018 - 2019 has completed the course on Analysis of Structural Members using Staad Pro Vei during the period from 12/7/18 to 23/07/18 at Knowledge Institute of Technology, Salem.

PRINCIPAL
Knowledge Institute of Technology
Kakapalayam (PO) Salem - 637 5

COURSE INSTRUCTOR	HOD/CIVIL	PRINCIPAL

Beyond Knowledge

KNOWLEDGE INSTITUTE OF TECHNOLOGY

Approved by AICTE, Affiliated to Anna University ,Accredited by NAAC

DEPARTMENT OF CIVIL ENGINEERING

CERTIFICATE

This is to certify that Mr/Ms V. Santhosh Kumar of IV year student in academic year 2018-19 has completed the course on Analysis of Structural Members using Staad Pro Vai during the period from 12/7/18 to 23/07/18 at Knowledge Institute of Technology, Salem.

PRINCIPAL,
Knowledge Institute of Technology
Kakapalayam (PO), Salem - 637 504

COURSE INSTRUCTOR	HOD/CIVIL	PRINCIPAL
P.M. Muthukumar	G. Suriya	

KNOWLEDGE INSTITUTE OF TECHNOLOGY, SALEM
DEPARTMENT OF CIVIL ENGINEERING

FEEDBACK FORM

COURSE on Analysis of Structural members using Staad pro v8i

Name: V Santhosh Kumar Year/Sem/Sec: IV/07

S.No	Feedback Questions	Good	Excellent	Moderate	Need to be improved
1	Course Content Delivery by the trainer				✓
2	Course Material				✓
3	Clarity of the content delivery				✓
4	Hands on training experience				✓
5	Overall experience about the Course				✓

Suggestions if any:

Course Material is Good

Student Sign:

PRINCIPAL,
Knowledge Institute of Technology
Kanjapalayam (PO), Salem - 637 504

KNOWLEDGE INSTITUTE OF TECHNOLOGY, SALEM
DEPARTMENT OF CIVIL ENGINEERING

FEEDBACK FORM

COURSE on Analysis of Structural members using Staad pro v8i

Name: obulievigneshe . S

Year/Sem/Sec: IV/07

S.No	Feedback Questions	Good	Excellent	Moderate	Need to be improved
1	Course Content Delivery by the trainer	✓			
2	Course Material	✓			
3	Clarity of the content delivery	✓			
4	Hands on training experience	✓			
5	Overall experience about the Course	✓			

Suggestions if any:

Hands on training experience is very good.

Student Sign:

PRINCIPAL,
Knowledge Institute of Technology
Kakapalayam (PO), Salem - 637 504

KNOWLEDGE INSTITUTE OF TECHNOLOGY, SALEM
DEPARTMENT OF CIVIL ENGINEERING

FEEDBACK FORM

COURSE on Analysis of Structural members using Staad pro v8i

Name: S.Neya

Year/Sem/Sec: IV/07

S.No	Feedback Questions	Good	Excellent	Moderate	Need to be improved
1	Course Content Delivery by the trainer			✓	
2	Course Material		✓		
3	Clarity of the content delivery		✓		
4	Hands on training experience	✓			
5	Overall experience about the Course			✓	

Suggestions if any:

course material good & very informative

S. Neya

Student Sign:

PRINCIPAL,
Knowledge Institute of Technology
Kakapalayam (PO), Salem - 637 504

KNOWLEDGE INSTITUTE OF TECHNOLOGY, SALEM
DEPARTMENT OF CIVIL ENGINEERING

FEEDBACK FORM

COURSE on Analysis of Structural members using Staad pro v8i

Name: S. Dhanush Kumar

Year/Sem/Sec: IV/07

S.No	Feedback Questions	Good	Excellent	Moderate	Need to be improved
1	Course Content Delivery by the trainer	✓			
2	Course Material		✓		
3	Clarity of the content delivery	✓			
4	Hands on training experience			✓	
5	Overall experience about the Course		✓		

Suggestions if any:

overall experience about the course is good.

Student Sign: S. Dhanush

PRINCIPAL,
Knowledge Institute of Technology
Kakapalayam (PO), Salem - 637 504

KNOWLEDGE INSTITUTE OF TECHNOLOGY, SALEM
DEPARTMENT OF CIVIL ENGINEERING

FEEDBACK FORM

COURSE on Analysis of Structural members using Staad pro v8i

Name: Sakthivel .S Year/Sem/Sec: IV/07

S.No	Feedback Questions	Good	Excellent	Moderate	Need to be improved
1	Course Content Delivery by the trainer	✓			
2	Course Material		✓		
3	Clarity of the content delivery	✓			
4	Hands on training experience			✓	
5	Overall experience about the Course	✓			

Suggestions if any:

Good coaching and clarity of content delivery

Student Sign:

PRINCIPAL,
Knowledge Institute of Technology
Kakapalayam (PO) Salem - 637 504